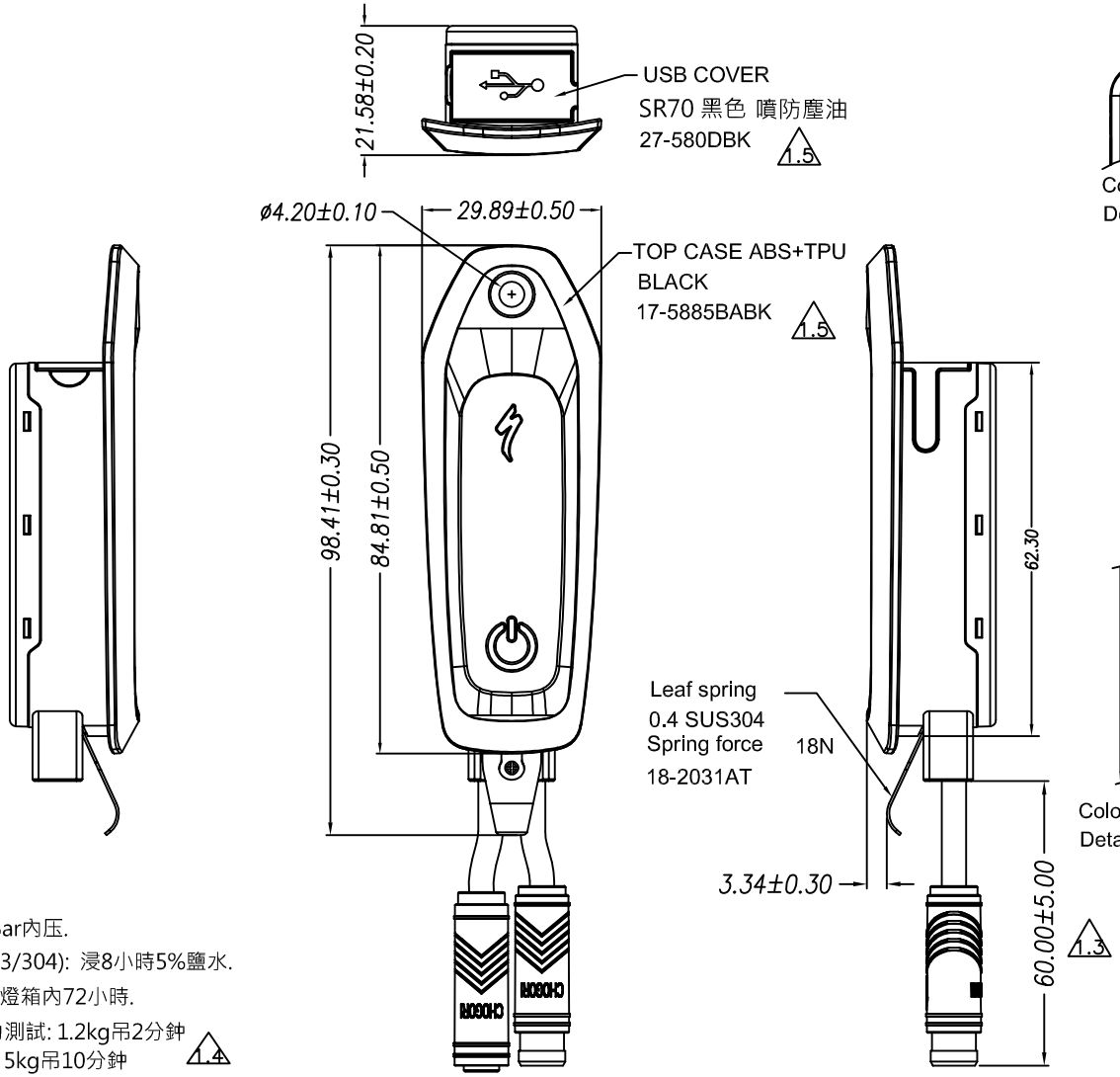

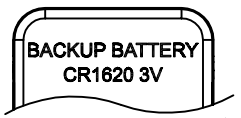

Color : White (全白色絲印)
Detail "X" (Scale 1.5:1)

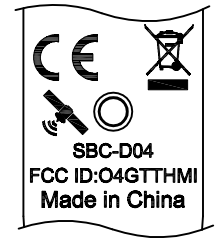

Color : White (全白色絲印)
Detail "Y" (Scale 1.5:1)

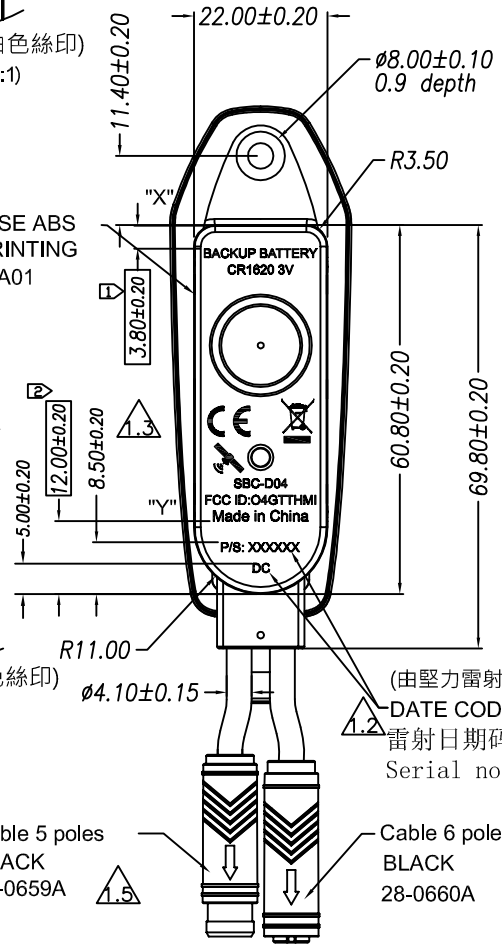

產品要求:
防水測試: 用0.3Bar內压.
抗腐測試(SUS303/304): 浸8小時5%鹽水.
UV測試: 放在UV燈箱內72小時.
USB COVER拉力測試: 1.2kg吊2分鈡
連接綫拉力測試: 5kg吊10分鈡 1.4
須符合Rohs及Reach的安全規格.
D-E 為必檢尺寸

ALL DIMENSIONS IN MM

1.5	更新Cable线 1.5	2018-03-08	DAYTON INDUSTRIAL CO. LTD. KENDY ENTERPRISE LTD.					LINEAR ±0.1 ANGULAR ±1° UNSPECIFIED TOLERANCE
1.4	更新產品要求 1.4	2017-10-31	TITLE: COSMETIC DRAWING		MODEL NAME: Specialized Trail Display			VERSION NO: 1.5
1.3	底殼增加絲印/更新各物料編號及線長 1.3	2017-10-13	PART NO: B9-SP3350000		MODEL NO: SP33500			DATE: 08-03-2018
1.2	增加雷射日期码 1.2	2017-09-04	MAT'L: ABS	SCALE: /	DOC CONTROL NO: DG00-2306			SHEET 1 of 1
REV.	REVISIONS	DATE	FINISH:	QTY:	DWN	CHKD		APPD

3rd angle projection