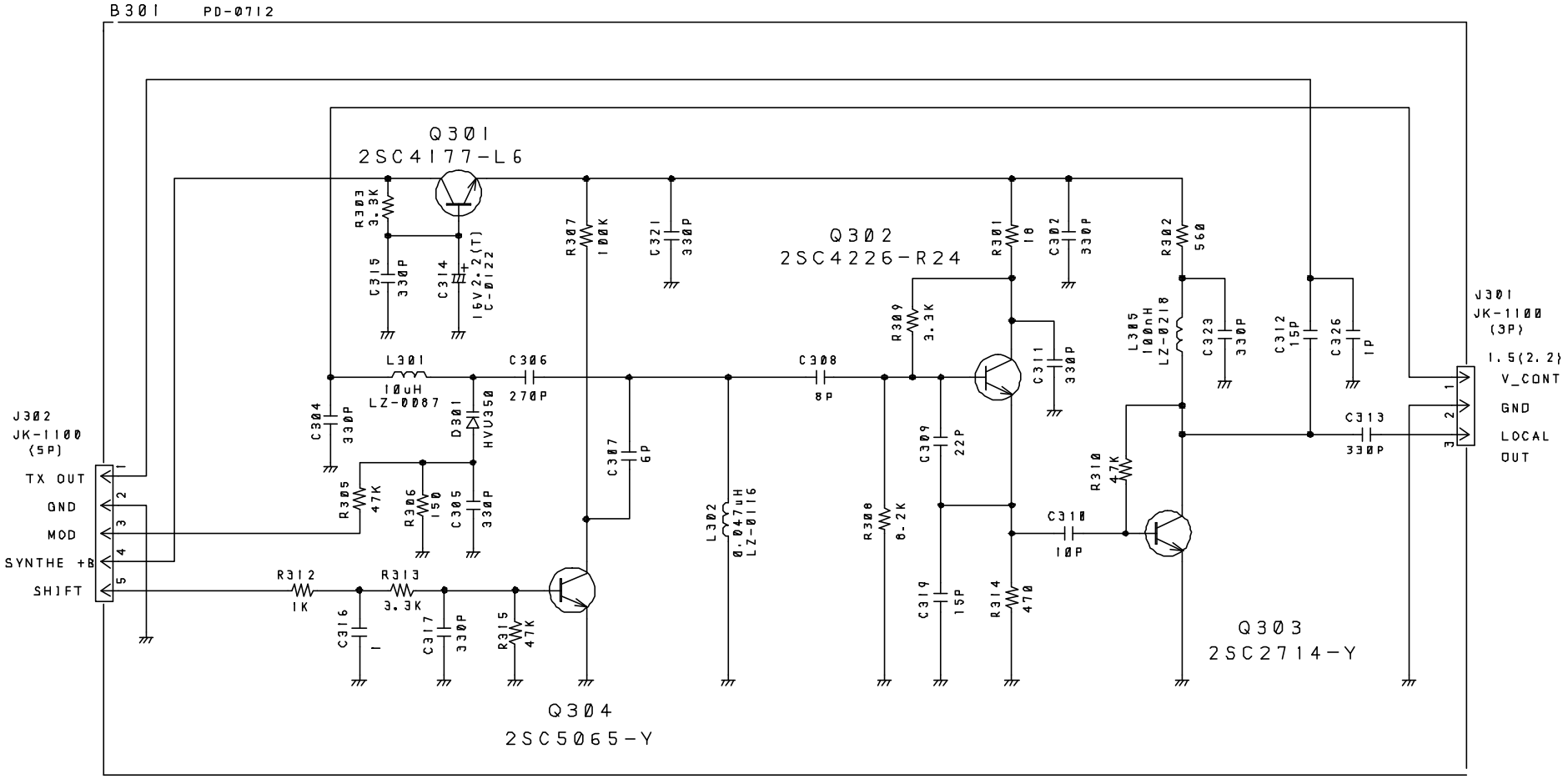

NOTES:

1. RESISTANCE VALUES ARE SHOWN IN OHMS UNLESS OTHERWISE NOTED. (K=KILO OHM, M=MEG OHM)
2. RESISTOR WATTAGES ARE [1/16W] UNLESS OTHERWISE NOTED.
3. CAPACITANCE VALUES ARE INDICATED IN MICRO FARADS UNLESS OTHERWISE NOTED (P=MICRO-MICRO FARAD)
4. ALL CAPACITORS TEMPERATURE CHARACTERISTICS ARE [CH] (LESS THAN 1000PF) OR [B] (MORE THAN 1000PF) UNLESS OTHERWISE NOTED.
5. CHIP PARTS ARE NOT SPECIFIED IN THIS DRAWING PLEASE REFER TO THE PARTS LIST FOR THE CHIP PARTS.

REVISIONS											
REV. CODE	△	△	△	△	△	△	△	△	△	△	△
DATE											
LOT#/RN#											
REVISED BY											
CHECKED BY											

DESIGN	DRAWN. BY	UNIDEN No	MODEL No
01/30/02	01/30/02	UT8B8ZL	POLARIS
TANAKA	TANAKA	TITLE VCO ASSY SCHEMATIC DIAGRAM	
CHECK BY	APPRO. BY		
		DRAWING No	
REV No		UNIDEN CORP.	