WESTERN Multiplex

INSTALLATION AND MAINTENANCE MANUAL

Lynx SC

E1 2.048 Mbps

1xE1, 2xE1 AND 4xE1 (2.048 Mbps)
SPREAD SPRECTRUM RADIOS
(2.4 AND 5.8 GHz)

Installation and Maintenance Manual

Copyright © 1998 by Western Multiplex Corporation. All rights reserved. No part of this manual may be reproduced without prior written permission from Western Multiplex Corp.

The information contained in this manual is subject to change without notice. Western Multiplex shall not be liable for errors contained herein or for incidental or consequential damages in connection with the furnishing, performance, or use of this manual or equipment supplied with this manual. Western Multiplex makes no warranty of any kind with regard to this manual or any equipment supplied with this manual, including, but not limited to, the implied warranties of merchantability and fitness for a particular purpose.

Heliax™ is a registered product of Andrews Corporation.
Fireberd is a registered product of Telecommunications Techniques Corporation.

Printed in the United States of America

Notice: Y2K (Year 2000 Issue)
All software supplied by and for Western Multiplex products adheres to the four-(4) digit year nomenclature as required for Year 2000 compliance.

Western Multiplex Corporation
1196 Borregas Avenue
Sunnyvale, California
USA
Tel: +1 408 542-5200
Fax:: +1 408 542-5300

Our facility has been Registered to the International Organization for Standardization ISO 9000 Series Standards for quality.

Issue: November 1999

This page intentionally left blank

Regulatory Notice

This equipment has been tested and found to comply with the limits for a class B digital device, pursuant to Part 15 of the FCC Rules. These limits are designed to provide reasonable protection against harmful interference in a residential installation. This equipment generates, uses and can radiate radio frequency energy and, if not installed and used in accordance with the instructions, may cause harmful interference to radio communications. However, there is no guarantee that interference will not occur in a particular installation. If this equipment does cause harmful interference to radio or television reception, which can be determined by turning the equipment off and on, the user is encouraged to try to correct the interference by one or more of the following measures:

* Reorient or relocate the receiving antenna.
* Increase the separation between the equipment and receiver.
* Connect the equipment into an outlet on a circuit different from that to which the receiver is connected.
* Consult the dealer or an experienced radio/TV technician for help.

Shielded cables and I/O cords must be used for this equipment to comply with the relevant FCC regulations.

Changes or modifications not expressly approved in writing by Western Multiplex may void the user's authority to operate this equipment.

This device complies with RSS-210 and/or RSS-139 of Industry Canada. Operation is subject to the following two conditions: (1) this device may not cause interference, and (2) this device must accept any interference, including interference that may cause undesired operation of the device.

***This device must be professionally installed*.**

This page intentionally left blank

WARRANTY

GENERAL TERMS

1.1 All Definitions contained in Western Multiplex's Conditions of Sale (Western Multiplex document number CS96-8), apply to the Warranty.

1.2 Subject to the provisions of the Warranty, Western Multiplex warrants that the equipment described in Paragraph 1.3 shall conform to their specifications described in Paragraph 1.4 in all material respects and that the equipment shall be free from material defects in materials and workmanship.

1.3 This Warranty applies to all original purchases of Western Multiplex manufactured equipment and accessories (collectively the "Equipment").

1.4 This Warranty applies to the specifications contained in the most recent version of the manual for the model of the Equipment purchased (the "Specifications").

1.5 This Warranty does not apply to the following items of Equipment which are covered by the Original Equipment Manufacturer's warranty:

(a) antenna systems, including coax cable, waveguide, connectors flex-sections, mounts, other parts of the antenna system and installation materials;

(b) non-Western Multiplex manufactured rack mounted equipment that is assembled wired and tested at Western Multiplex's factory or supplied as part of a system, including orderwire items, channel banks, multiplexers, fuse/alarm panels, remote alarm items; and

(c) equipment which is not listed in Western Multiplex's price book.

1.6 The effective period of this Warranty shall start on the date of shipment of the Equipment and shall end:

(a) for all spread spectrum unlicensed radio products and for all licensed digital microwave radio products, two (2) years later;

(b) for all analog microwave radio products, three (3) years later; or

(c) for all baseband products, five (5) years later (in each case the "Warranty Period").

1.7 The Customer acknowledges that Western Multiplex does not represent or warrant that the services provided by Western Multiplex under this Warranty will ensure uninterrupted or error-free operation of the Equipment.

RETURN OF EQUIPMENT UNDER WARRANTY

2.1 If an item of Equipment malfunctions or fails in normal intended usage and maintenance within the applicable Warranty Period:

(a) the Customer shall promptly notify Western Multiplex of the problem and the serial number of the defective item;

(b) Western Multiplex shall, at its sole option, either resolve the problem over the telephone or provide the Customer with a Returned Materials Authorization number (RMA #) and the address of the location to which the Customer may ship the defective item;

(c) if the problem is not resolved over the telephone, the Customer shall attach a label to each Returned item describing the fault and the Customer's Return address. The Customer shall, at its cost, properly pack the item to be Returned, prepay the insurance and shipping charges, and ship the item to the specified location;

(d) if the Western Multiplex product shall prove to be defective in material or workmanship upon examination by Western Multiplex, Western Multiplex shall either repair or replace the Returned item at its sole option. The replacement item may be new or refurbished; if refurbished, it shall be equivalent in operation to new Equipment. If a Returned item is replaced by Western Multiplex, the Customer agrees that the Returned item shall become the property of Western Multiplex.

(e) Western Multiplex shall at its cost, ship the repaired item or replacement to any destination within the United States of America by carrier and method of delivery chosen by Western Multiplex. If the Customer has requested some other form of conveyance, such as express shipping, or is located beyond the USA borders, then the Customer shall pay to the cost of return shipment.

2.2 Equipment which is repaired or replaced by *Western Multiplex* under this Warranty shall be covered under all of the provisions of this Warranty for the remainder of the applicable Warranty Period or ninety (90) days from the date of shipment of the repaired item or replacement, whichever period is longer.

DEFAULT AND TERMINATION

3.1 *Western Multiplex* may immediately terminate this Warranty and all of its performance under this Warranty, upon notification to the Customer, if the Customer:

(a) makes any unauthorized modifications to the Equipment;

(b) assigns or transfers the Customer's rights or obligations under this Warranty without the written consent of *Western Multiplex*;

(c) becomes bankrupt or insolvent, or is put into receivership; or

(d) has not paid *Western Multiplex* all amounts for the Equipment, services, or other additional charges within thirty (30) days of receipt of written notice from *Western Multiplex*.

3.2 If this Warranty is terminated by *Western Multiplex*, the Customer shall remain liable for all amounts due to *Western Multiplex*.

FORCE *MAJEURE*

4.1 "Force Majeure" has the same meaning as defined in *Western Multiplex*'s Conditions of Sale (*Western Multiplex* document number CS96-8).

4.2 *Western Multiplex* shall not be responsible for failure to discharge its obligations under this Warranty due to Force Majeure.

LIMITATIONS AND QUALIFICATIONS OF WARRANTY

5.1 This Warranty does not apply to any damage, defect or failure caused by:

(a) any part of the Equipment having been modified, adapted, repaired, or improperly installed, operated, maintained, transported or relocated by any person other than *Western Multiplex* personnel or a *Western Multiplex* authorized service agent, without *Western Multiplex*'s prior written consent;

(b) storage or environmental conditions which do not conform to the applicable sections of the appropriate *Western Multiplex* Equipment Manual;

(c) failure to conform with the Equipment Installation, Operating and Maintenance Instructions of the appropriate *Western Multiplex* Equipment Manual;

(d) external causes, including external electrical stress or lightning, or use in conjunction with incompatible equipment, unless such use was with *Western Multiplex*'s prior written consent;

(e) cosmetic damage;

(f) accidental damage, negligence, neglect, mishandling, abuse or misuse, other than by *Western Multiplex* personnel or a *Western Multiplex* authorized service agent; or

(g) Force *Majeure*.

Please see reverse side for additional limitations on damages.

LIMITATIONS ON DAMAGES (North America)

6.1 THE WARRANTY STATED IN THIS DOCUMENT IS THE CUSTOMER'S EXCLUSIVE WARRANTY FOR THE EQUIPMENT; WESTERN MULTIPLEX SPECIFICALLY DISCLAIMS ALL OTHER WARRANTIES OF ANY KIND, EXPRESS OR IMPLIED, INCLUDING ANY WARRANTIES OF FITNESS FOR A PARTICULAR PURPOSE AND OF MERCHANTABILITY.

6.2 WESTERN MULTIPLEX SHALL NOT BE LIABLE IN TORT, INCLUDING LIABILITY IN NEGLIGENCE OR STRICT LIABILITY, AND SHALL HAVE NO LIABILITY AT ALL FOR INJURY TO PERSONS OR PROPERTY. WESTERN MULTIPLEX'S LIABILITY FOR FAILURE TO FULFIL ITS OBLIGATIONS UNDER THIS WARRANTY OR ANY OTHER LIABILITY UNDER OR IN CONNECTION WITH THE EQUIPMENT SHALL BE LIMITED TO THE AMOUNT OF THE PURCHASE PRICE OF THE EQUIPMENT. THE REMEDIES STATED IN THIS WARRANTY ARE THE CUSTOMER'S EXCLUSIVE REMEDIES AGAINST WESTERN MULTIPLEX REGARDING THE EQUIPMENT.

6.3 EVEN IF WESTERN MULTIPLEX HAS BEEN ADVISED OF THE POSSIBILITY OF THEM, WESTERN MULTIPLEX SHALL NOT BE LIABLE FOR ANY INDIRECT, INCIDENTAL, SPECIAL OR CONSEQUENTIAL DAMAGES, INCLUDING THE COST OF LABOR BY THE CUSTOMER'S OWN EMPLOYEES, AGENTS OR CONTRACTORS IN IDENTIFYING, REMOVING OR REPLACING THE DEFECTIVE ITEM; LOST PROFITS, AND REVENUES; FAILURE TO REALIZE EXPECTED SAVINGS; ANY CLAIM AGAINST A CUSTOMER BY A THIRD PARTY; OR ANY OTHER COMMERCIAL OR ECONOMIC LOSSES OF ANY KIND.

6.4 THESE LIMITATIONS AND DISCLAIMERS ARE NOT MADE BY WESTERN MULTIPLEX WHERE PROHIBITED BY LAW.

LIMITATIONS ON DAMAGES (International)

6.1 THE WARRANTY STATED IN THIS DOCUMENT IS THE CUSTOMER'S EXCLUSIVE WARRANTY FOR THE EQUIPMENT; ALL OTHER WARRANTIES OF ANY KIND, EXPRESS OR IMPLIED, INCLUDING ANY WARRANTIES OF FITNESS FOR A PARTICULAR PURPOSE AND OF MERCHANTABILITY ARE EXCLUDED TO THE FULLEST EXTENT PERMITTED BY LAW.

6.2 WESTERN MULTIPLEX'S LIABILITY FOR FAILURE TO FULFIL ITS OBLIGATIONS UNDER THIS WARRANTY OR IN TORT OR AS A RESULT OF STRICT LIABILITY OR ANY OTHER LIABILITY UNDER OR IN CONNECTION WITH THE EQUIPMENT OR ITS SUPPLY SHALL BE LIMITED, EXCEPT IN RESPECT OF DEATH AND PERSONAL INJURY CAUSED BY WESTERN MULTIPLEX'S NEGLIGENCE, TO THE AMOUNT OF THE PURCHASE PRICE OF THE EQUIPMENT. THE REMEDIES STATED IN THIS WARRANTY ARE THE CUSTOMER'S EXCLUSIVE REMEDIES AGAINST WESTERN MULTIPLEX REGARDING THE EQUIPMENT.

6.3 EVEN IF WESTERN MULTIPLEX HAS BEEN ADVISED OF THE POSSIBILITY OF THEM, WESTERN MULTIPLEX SHALL NOT BE LIABLE FOR ANY INDIRECT, INCIDENTAL, SPECIAL OR CONSEQUENTIAL DAMAGES, INCLUDING THE COST OF LABOR BY THE CUSTOMER'S OWN EMPLOYEES, AGENTS OR CONTRACTORS IN IDENTIFYING, REMOVING OR REPLACING THE DEFECTIVE ITEM; LOST PROFITS, AND REVENUES; FAILURE TO REALIZE EXPECTED SAVINGS; ANY CLAIM AGAINST A CUSTOMER BY A THIRD PARTY; OR ANY OTHER COMMERCIAL OR ECONOMIC LOSSES OF ANY KIND.

CONDITIONS OF SALE

DEFINITIONS

1.1 In these Conditions, unless there is something in the subject matter or context necessarily inconsistent:

(a) "Western Multiplex" means Western Multiplex (d.b.a. Western Multiplex), Sunnyvale, CA;

(b) "Equipment" means the equipment itemized on the Quotation/Order Acknowledgment;

(c) "International" means any location other than United States of America and Canada, including their territories and possessions;

(d) "North America" means any location in the United States of America and Canada, including their territories and possessions;

(e) "Order Acknowledgment" means the sales order acknowledgment provided by Western Multiplex to the Customer;

(f) "Payment Instructions" means Western Multiplex's payment instructions, (Western Multiplex document P197-1);

(g) "Quotation" means the quotation signed by an authorized representative of Western Multiplex and provided to the Customer;

(h) "Shipping Date" means the actual date on which the Equipment left Western Multiplex's factory at Sunnyvale, CA, U.S.A.;

(i) "Warranty" means Western Multiplex's warranty, document W97-1;

(j) "Invoice" means the bill of goods prepared by Western Multiplex for the equipment with the shipping and any insurance costs.

1.2 Headings have been inserted in these Conditions for convenience of reference only and will not effect their construction.

ENTIRE AGREEMENT

2.1 The Quotation, these Conditions of Sale, the Order Acknowledgment, the Payment Instructions and the Warranty shall apply to all sales made by Western Multiplex and shall constitute the entire agreement by Western Multiplex and the Customer (the "Agreement ").

2.2 Any terms and/or conditions of sale, which may be included on the Customer's purchase order form or any communication from the Customer, that are not identical with the terms and conditions steed in this document shall NOT become a part of the agreement of sale unless expressly agreed to in writing in the Quotation.

2.3 Western Multiplex's failure to object to any terms and/or conditions of sale contained in any communication from the Customer shall not be considered as acceptance of such terms and/or conditions or as a waiver of the terms and conditions of sale contained herein.

2.4 Western Multiplex shall sell to the Customer, and the Customer shall purchase from Western Multiplex, the Equipment in accordance with the Agreement. Western Multiplex accepts the Customer's purchase orders for Equipment and agrees to deliver the Equipment to the Customer only on the terms of the Agreement.

2.5 No variation of the Agreement shall be binding unless agreed to in writing by authorized representatives of Western Multiplex and the Customer.

PRICING

3.1 All prices in the Quotation are exclusive of all shipping charges and all applicable taxes including but not limited to, federal, state, local, excise, sales and use taxes.

3.2 All prices in the Quotation unless otherwise stated:

(a) for North American customers are FOB Sunnyvale, CA, USA. (New York Uniform Commercial Code); or

(b) for international customers are Ex-Works, Sunnyvale, CA, U.S.A. (Incoterms 1990).

3.3 All prices in the Quotation include standard domestic packing, unless a separate line item is provided detailing export or special packing charges.

SHIPPING AND INSURANCE

4.1 Western Multiplex shall arrange shipping and insurance when requested by the Customer, and shall bill the Customer for the Equipment with the shipping and any insurance costs as separate items, on an invoice (the "Invoice").

4.2 Delivery dates quoted by Western Multiplex are to be considered estimates only. In no event will Western Multiplex be liable for any loss or damage resulting from its failure to deliver products within a specified time.

TERMS OF PAYMENT

5.1 The Customer shall pay for all Equipment, including shipping and insurance in accordance with the terms of the Invoice.

5.2 All Invoices for North American Customers are due and payable in thirty (30) days from the date of the Invoice.

5.3 International Customers shall make payments in accordance with Western Multiplex's Payment Instructions by either:

(a) providing a wire transfer (telegraphic transfer) for the full amount of the Equipment, shipping and insurance charges contained in the Quotation or the pro-forma Invoice sent to the Customer, prior to the Shipping Date; or

(b) establishing an acceptable Letter of Credit (LC) for the full amount of the Equipment, shipping and insurance charges contained in the Quotation prior to the order being booked and accepted by Western Multiplex.

5.4 If a Customer fails to pay an Invoice when due, Western Multiplex may, without prejudice to am other remedy, postpone shipments, alter payment terms, terminate the Agreement and charge interest on all overdue amounts the rate of 1.5% per month compounded monthly (or if less, the maximum allowed by law). Upon demand, the Customer shall pay all such interest charges and all reasonable collection fees, including reasonable legal expenses.

SECURITY FOR PAYMENT

6.1 If the Customer is located in North America, the Customer grants to Western Multiplex a purchase money security interest in the Equipment to secure the payment of the purchase price of the Equipment and all other amounts due from the Customer.

6.2 If the Customer is not located in North America:

(a) despite delivery and passing of risk in the Equipment and any other provision of these Conditions, the title in the Equipment shall not pass to the Customer until Western Multiplex has received payment in full of the purchase price of the Equipment and all other amounts then due from the Customer, and

(b) until the title in the Equipment passes to the Customer:

(i) the Customer shall hold the equipment as Western Multiplex 's fiduciary agent and bailee, and shall properly store, protect and insure the Equipment and shall identify the Equipment as Western Multiplex property;

(ii) if the Customer fails to pay Western Multiplex in accordance with the agreed payment terms, Western Multiplex may require the Customer to deliver up the Equipment to Western Multiplex, and, if the Customer does not, Western Multiplex may enter on the premises where the Equipment is stored and repossess the Equipment; and

(iii) the Customer shall not pledge the Equipment by way of security for any, indebtedness of the Customer, but if the Customer does so all moneys owed by the Customer to Western Multiplex shall, without prejudice to any other remedy of Western Multiplex, immediately become due.

CHANGES TO PRODUCT SPECIFICATIONS

7.1 Western Multiplex may, without notice to the Customer, make changes to the specifications of Equipment which do not materially affect the quality or performance of the Equipment.

EQUIPMENT CONFIGURATION AND EXPEDITING CHARGES

8.1 At the Customer's request, Western Multiplex may, for a fee agreed in advance:

(a) reconfigure the Equipment; or

(b) expedite the Customer's order.

SHORTAGES

9.1 The customer shall not make any claim for shortages (which are items that the Invoice does not show are on back-order) after twenty-one (21) days after the date of the Invoice.

RETURNS AND EXCHANGES

10.1 The return of defective Equipment is covered by the Warranty .

10.2 The Customer may only return Equipment that is not defective if:

(a) the Equipment does not correspond with the Customer's purchase order; or

(b) the Equipment has been ordered in error by the Customer and Western Multiplex has permitted the Customer to remedy the mistake by ordering the correct equipment and resuming the Equipment and the Customer obtains a Returned Materials Authorization number ("RMA #") from Western Multiplex prior to returning any Equipment.

10.3 Western Multiplex reserves the right to charge a fee for returned equipment under Subparagraph 10.2(b) with the amount of the fee being determined prior to an RMA # being given by Western Multiplex.

10.4 Authorized returns of equipment under Paragraph 10.2 must be in an undamaged condition, in the original configuration, in the original packing materials and within a time period agreed to when the RMA # was issued.

10.5 If the Customer does not comply with the provisions of Paragraphs 10.2, 10.3, and 10.4, the Customer shall pay the full amount of the Invoice.

10.6 The party liable for all shipping, insurance and any other expenses incurred by the Customer in returning the Equipment under Paragraph 10.2 and for all loss or damage to the Equipment until received by Western Multiplex, shall be: (a) for all items returned under Subparagraph 10.2(a), Western Multiplex and (b) for all items resumed under Subparagraph 10.2(b), the Customer.

CANCELLATION

11.1 If the Customer cancels an order before the Shipping Date, Western Multiplex reserves the right to charge the Customer a cancellation charge up to 100% of the amount of the order.

11.2 The Customer shall pay all cancellation charges within thirty (30) days from date of the Invoice.

FORCE MAJEURE

12.1 Western Multiplex shall not be liable if its performance of the Agreement becomes commercially impractical due to any contingency beyond Western Multiplex's reasonable control, including acts of God, fires, floods, wars, sabotage, civil unrest, accidents, labor disputes or shortages, government laws, rules and regulations, whether valid or invalid, inability to obtain material, equipment or transportation, incorrect, delayed or incomplete specifications, drawings or data supplied by the Customer or others (collectively "Force Majeure"). In no event of Force Majeure shall Western Multiplex be required to purchase goods from others to enable it to deliver the Equipment under the Agreement.

ENGINEERING AND SYSTEM DESIGN

13.1 The Customer is solely responsible for the engineering, design, integration and normal preventative and remedial maintenance of the Customer's system for which Western Multiplex supplies Equipment.

13.2 Western Multiplex is not responsible for the satisfactory operation of the Equipment in conjunction with other manufacturer's equipment, nor for any losses which may occur as a result of a failure of the Equipment to operate in conjunction with other manufacturer's equipment.

WARRANTY

14.1 All Equipment is covered by the Warranty.

14.2 THE WARRANTY CONTAINS LIMITATIONS ON THE CUSTOMER'S RIGHTS AND REMEDIES AGAINST WESTERN MULTIPLEX UNDER THE AGREEMENT. THE CUSTOMER ACKNOWLEDGES HAVING READ, UNDERSTOOD AND AGREED TO THOSE LIMITATIONS.

DAMAGES FOR BREACH OF AGREEMENT

15.1 If either party is successful in any litigation between the parties based on the Agreement, the successful party shall recover from the other, in addition to direct damages, the successful party's reasonable attorney's fees and other costs of litigation.

INSOLVENCY OF CUSTOMER, ETC.

16.1 Western Multiplex may cancel the Agreement and suspend any further deliveries under the Agreement without any liability to the Customer, and, if Equipment has been delivered but not paid for, the price shall become immediately due and payable despite any other agreement to the contrary if:

(a) any proceedings in bankruptcy, insolvency, receivership or liquidation are taken against the Customer;

(b) the Customer makes an assignment for the benefit of creditors or commits an act of bankruptcy or insolvency;

(c) the Customer ceases, or threatens to cease, to carry on the ordinary course of its business, or transfers all or substantially all of its property;

(d) the Equipment is seized under any legal process or confiscated; or

(e) Western Multiplex in good faith believes that the ability of the Customer to pay or perform any provision of the Agreement is impaired, or that any of the events mentioned above is about to occur.

NOTICE

17.1 All requests, instructions and notices from one party to the other must be in writing and may be given via registered post or facsimile transmission to the address of the parties shown on the Quotation or Order Acknowledgment.

EXPORT PROVISIONS

18.1 The Customer shall not, whether directly or indirectly (including facilitating a third party) export or re-export the Equipment outside the country in which the Customer has stated these items are to be used without obtaining the licenses required under ail applicable rules. The Customer shall indemnify Western Multiplex against any liability incurred by Western Multiplex due to any violation by the Customer of any of the provisions of this Section, but this indemnity shall not apply if the Customer reasonably relies on information supplied to it by Western Multiplex with respect to export licenses. Upon receipt of a governmental consent to export the receiving party shall immediately notify the other in writing.

MISCELLANEOUS

19.1 No waiver by Western Multiplex of any breach of this Agreement shall be considered as a waiver of any subsequent breach of the same or any other provision.

19.2 Any provision of the Agreement which is, or is deemed to be, unenforceable in any jurisdiction shall be severable from the Agreement in that jurisdiction without in any way invalidating the remaining portions of the Agreement, and that unenforceability shall not make that provision unenforceable in any other jurisdiction.

19.3 The rights which accrue to Western Multiplex by virtue of the Agreement shall inure for the benefit of and be binding upon the successors and assigns of Western Multiplex.

19.4 The agreement shall be governed by the laws of the State of California including the California Uniform Commercial Code. However Western Multiplex may enforce the provisions of the Agreement in accordance with the laws of the jurisdiction in which the Equipment is situated. The United Nations Convention on the Sale of Goods (The Vienna Convention) shall not apply to the Agreement.

19.5 Les parties ont exigés que cette entente soit rédigée en anglais.

Table of Contents

1. HOW TO USE THIS MANUAL 1-1

1.1 MANUAL ORGANIZATION 1-1
1.2 ICONS 1-2

2. PRODUCT DESCRIPTION 2-1

2.1 GENERAL DESCRIPTION 2-1
2.2 SPECIFICATIONS 2-2
2.2.1 Transmitter 2-2
2.2.2 Antenna / Antenna Coupling Unit 2-3
2.2.3 Receiver 2-4
2.2.4 System (Single Hop Performance) 2-5
2.2.5 Digital Line Interface 2-7
2.2.6 Auxiliary Connections 2-8
2.2.7 Temperature and Environment 2-9
2.2.8 Power 2-9
2.2.9 Regulatory Information 2-10
2.2.10 Mechanical 2-10
2.3 FRONT PANEL DESCRIPTION 2-11
2.3.1 General 2-11
2.3.2 Test Points / Power Indicator 2-12
2.3.3 Alarm and Status Indicators 2-13
2.3.4 Controls 2-14
2.3.5 Connections 2-15
2.4 REAR PANEL DESCRIPTION 2-16
2.4.1 RF Connection 2-17
2.4.2 DATA Connections 2-18
2.4.3 Auxiliary Data Connections 2-19
2.4.4 Switches 2-20
2.5 INSTALLATION ACCESSORIES 2-22

3. INSTALLATION & ADJUSTMENTS 3-1

3.1 SHIPPING CONTAINER 3-1
3.2 PACKING ITEMS IDENTIFICATION 3-2
3.3 BEFORE INSTALLATION TASK LIST 3-3
3.3.1 Site Selection Requirements 3-3
3.3.2 Line-of-Sight and Path Clearance Guidelines 3-4
3.3.3 RSL Calculation and Link Budget 3-5
3.3.4 Fade Margin Calculation 3-6
3.3.5 Availability Calculation 3-7
3.3.6 Frequency Plan Determination 3-8
3.3.7 Power Supply Planning 3-9
3.3.8 Antenna Planning 3-10
3.4 TOOLS REQUIRED 3-11

3.5 FREQUENCY CHANNEL PLANS 3-12
3.6 MOUNTING THE *LYNX.SC* 3-15
3.7 POWER CONNECTION AND WIRING 3-16
3.7.1 DC Power Wiring 3-17
3.7.2 AC Power Connection 3-19
3.8 ANTENNA CONNECTION 3-20
3.9 TRANSMISSION LINE CONNECTION 3-21
3.10 ANTENNA INSTALLATION & ALIGNMENT 3-22
3.11 CEPT-1 (E1) INTERFACECONNECTION 3-25
3.12 DIP SWITCH SETTINGS 3-26
3.12.1 Channel Selection 3-26
3.12.2 Loopback Test Signal Selection 3-27
3.12.3 Spreading Code Selection 3-28
3.12.4 Input Alarm (Data Loss) Enable/Disable 3-29
3.12.5 AIS Enable/Disable 3-30
3.13 SYSTEM TURN-UP TO SERVICE 3-31
3.13.1 Output Power Adjustment 3-39
3.13.2 Loopback/BER Testing 3-40
3.13.3 Error LED Mode Selection 3-42
3.14 ADDITIONAL CONNECTIONS 3-43
3.14.1 Orderwire Connection and Address Selection 3-43
3.14.2 Alarm Connections 3-46
3.14.3 Diagnostics Port Operation 3-48
3.14.3.1 Diagnostics Port using RS-232 3-49
3.14.3.2 Diagnostics Port using RS-422 3-50
3.14.3.3 TBOS Protocol and Map 3-51
3.14.4 AUX DATA (Digital Service Channel) Connection 3-53
3.14.5 Protect Port Connection (Preliminary Information) 3-56
3.14.6 Protect Port Connection (Preliminary Information) 3-57

4. TROUBLESHOOTING 4-1

4.1 REGULAR MAINTENANCE 4-1
4.2 CHANGING FREQUENCY PLANS 4-2
4.3 USING A SPARE TERMINAL 4-3
4.4 TECHNICAL SUPPORT 4-4
4.5 REPAIR POLICY 4-5
4.6 FRONT PANEL STATUS LEDS 4-6
4.6.1 DATA LOSS Alarms 4-7
4.6.2 BER (Bit Error Rate) Alarm 4-9
4.6.3 RX SYNC (Receiver Synchronization) Alarm 4-12
4.6.4 AIS OUT (Alarm Indication Signal) 4-13
4.6.5 FAN Alarm 4-14
4.6.6 RADIO FAIL Alarm 4-15
4.6.7 FAR END Alarm 4-16
4.7 ERRORS IN THE DATA STREAM 4-17
4.8 INTERFERENCE COUNTERMEASURES 4-18
4.8.1 Use of a Spectrum Analyzer to Evaluate Potential Interference 4-20
4.9 BACK-TO-BACK TESTING 4-21
4.10 BER (BIT ERROR RATE) TESTING 4-23

5. APPENDICES 5-1

APPENDIX A - DIGITAL LINE INTERFACE SPECIFICATIONS 5-1
1. General Characteristics 5-1
2. Specifications at the output ports 5-1
APPENDIX B - REAR PANEL DIP SWITCHES 5-3
APPENDIX C - REAR PANEL DATA CONNECTORS 5-9

Figures

FIGURE 2-1: FRONT PANEL, 2.4 GHZ & 5.8 GHZ 1xE1 2-11
FIGURE 2-2: FRONT PANEL, 2.4 GHZ & 5.8 GHZ 2xE1 2-11
FIGURE 2-3: FRONT PANEL, 2.4 GHZ & 5.8 GHZ GHZ 4xE1 2-11
FIGURE 2-4: REAR PANEL, 1xE1 2-16
FIGURE 2-5: REAR PANEL, 2xE1 2-16
FIGURE 2-6: REAR PANEL, 4xE1 2-16
FIGURE 2-7: CEPT-1 INTERFACE GROUNDING SWITCH 2-18

FIGURE 3-1: CHANNEL PLAN, 2.4 GHZ 1xE1 3-12
FIGURE 3-2: CUSTOM CHANNEL PLAN, 2.4 GHZ E1 3-12
FIGURE 3-3: CHANNEL PLAN, 2.4 GHZ 2xE1 3-13
FIGURE 3-4: CHANNEL PLAN, 5.8 GHZ 1xE1 3-13
FIGURE 3-5: CHANNEL PLAN, 5.8 GHZ 2xE1 3-14
FIGURE 3-6: CHANNEL PLAN, 5.8 GHZ 4xE1 3-14
FIGURE 3-7: NEGATIVE VOLTAGE DC CONNECTION 3-18
FIGURE 3-8: POSITIVE VOLTAGE DC CONNECTION 3-18
FIGURE 3-9: AC CONNECTION 3-19
FIGURE 3-10: TYPICAL RSL VOLTAGE VERSUS RECEIVED SIGNAL LEVEL (RSL) 3-24
FIGURE 3-11: CEPT-1 INTERFACE GROUNDING SWITCH 3-25
FIGURE 3-12: LOOPBACK MODE SELECTION 3-27
FIGURE 3-13: SPREADING CODE SELECTION 3-28
FIGURE 3-14: INPUT ALARM DISABLE SWITCH 3-29
FIGURE 3-15: AIS SWITCH 3-30
FIGURE 3-16: TYPICAL RF OUTPUT POWER VERSUS PWR VOLTAGE, 2.4 GHZ MODELS 3-33
FIGURE 3-17: TYPICAL RF OUTPUT POWER VERSUS PWR VOLTAGE, 5.8 GHZ MODELS 3-34
FIGURE 3-18: ERROR LED MODE SELECTION 3-42
FIGURE 3-19: RJ-11 ORDERWIRE TELEPHONE CONNECTION 3-44
FIGURE 3-20: VF PORT CONNECTION 3-45
FIGURE 3-21: PIN CONNECTIONS, ALARM INTERFACE 3-46
FIGURE 3-22: DIAGNOSTIC PORT PROTOCOL SELECTION 3-48
FIGURE 3-23: RS-232 DIAGNOSTIC PORT CONNECTIONS 3-49
FIGURE 3-24: RS-422 DIAGNOSTIC PORT CONNECTIONS 3-50
FIGURE 3-25: REPEATER AND HUB TBOS RADIO NETWORK MANAGEMENT 3-54
FIGURE 3-26: REPEATER APPLICATION WITH SITE NETWORK MANAGEMENT 3-54
FIGURE 3-27: AUX DATA CABLE CONNECTION FOR REPEATER/HUB 3-55
FIGURE 3-28: AUX DATA SELECTION 3-55
FIGURE 3-29: MHS CONFIGURATION 3-56
FIGURE 3-30: SD CONFIGURATION 3-57
FIGURE 4-1: BACK-TO-BACK TEST CONFIGURATION 4-22
FIGURE 4-2: END-TO-END BER TEST CONFIGURATION 4-23

FIGURE A-1: MASK OF THE E1 PULSE (CEPT-1) 5-2
FIGURE C-1: VF PORT CONNECTION 5-9
FIGURE C-2: ALARM PORT CONNECTIONS 5-9
FIGURE C-3: DIAGNOSTIC PORT 9-PIN D-STYLE CONNECTOR 5-10
FIGURE C-4: AUX DATA PORT 9-PIN D-STYLE CONNECTOR 5-10

Tables

TABLE 3-A: DC POWER CONNECTION FOR NEGATIVE SUPPLY 3-16
TABLE 3-B: DC POWER CONNECTION FOR NEGATIVE SUPPLY 3-16
TABLE 3-C: TRANSMITTER OUTPUT POWER ADJUSTMENT, +6 DBW EIRP INSTALLATIONS 3-37
TABLE 3-D: TRANSMITTER OUTPUT POWER ADJUSTMENT FOR 2.4 GHZ, USA INSTALLATIONS 3-38
TABLE 3-E: ALARM INTERFACE CONNECTIONS 3-47
TABLE 3-F: TBOS MAP FOR THE LYNX.SC E1S 3-52

TABLE A-2: CEPT-1 INTERCONNECTION SPECIFICATION 5-1

TABLE B-1: LYNX.SC 2.4 GHZ 1XE1, 2XE1 & 4XE1 SWITCH SETTINGS 5-4
TABLE B-2: LYNX.SC 2.4 GHZ 2XE1 SWITCH SETTINGS 5-5
TABLE B-3: LYNX.SC 5.8 GHZ 1XE1 SWITCH SETTINGS 5-6
TABLE B-4: LYNX.SC 5.8 GHZ 2XE1 SWITCH SETTINGS 5-7
TABLE B-5: LYNX.SC 5.8 GHZ 4XE1 SWITCH SETTINGS 5-8

1. How to Use This Manual

1.1 Manual Organization

The Installation and Maintenance Manual provides information required to install and maintain the *LYNX.sc* and to use its many features to the fullest advantage. This manual is divided into the following sections:

Section 1 Provides instructions on how to most effectively utilize the information in this manual.

Section 2 Provides a brief description and specifications of the *LYNX.sc*.

Section 3 Explains the *LYNX.sc* installation and adjustments in detail.

Section 4 Provides maintenance, repair and troubleshooting information for the *LYNX.sc Spread Spectrum radios*.

Appendices Charts and diagrams are provided for radio connections and DIP switch settings along with other general information.

This device must be professionally installed. Instructions on setting the transmitter RF output power are contained in Section 3 of this Manual.

This device is to be used exclusively for fixed point-to-point operation that employs directional antennas.

1.2 Icons

Throughout this manual, the following icons are used to highlight areas of special interest and importance.

Note

Practical Tip

Caution

2. Product Description

2.1 General Description

The *LYNX.sc* Spread Spectrum radios provide a new level of control and convenience in a digital communications network.

The *LYNX.sc* radios carries up to four E1 signals between two locations without the delay and expense of installing cable or traditional microwave.

Because each owner controls the operation of the link, there is no reliance on any outside services. *LYNX.sc* radio operators are able to operate instant links whenever needed, and to be in control of their own network.

The *LYNX.sc* offers two primary benefits:

- **CONVENIENCE** — Easy to install and operate with **no user license requirements** or frequency coordination in the USA. (Other countries may require a user license and/or frequency coordination).

- **CAPABILITY** — Full transparent E1 signals over any line-of-sight distance (typically up to 50 miles, depending on terrain and governmental regulations).

2.2 Specifications

All specifications are subject to change without notice.

2.2.1 Transmitter

	All Models		
Frequency Selection	Rear Panel DIP switches; 7-cavity RF filter assembly		
Modulation	OQPSK		
Coding	Direct Sequence		
Number of Codes	4 (Rear Panel DIP switch selectable)		
	2.4 GHz E1	**2.4 GHz 2 x E1**	2.4 GHz 4 x E1
Output Power (max.)	+30 dBm*	+30 dBm*	+30 dBm*
Output Power (typ.)	+27 dBm*	+27 dBm*	+27 dBm*
Control Range	16 dB min.	16 dB min.	16 dB min.
Frequency Range	2410-2473 MHz (occupies 2400-2483.5 MHz)	2421-2462.5 MHz (occupies 2400-2483.5 MHz)	2421-2462.5 MHz (occupies 2400-2483.5 MHz)
**** 10 dB less on ETSI compliant models***			
	5.8 GHz E1	**5.8 GHz 2 x E1**	**5.8 GHz 4 xE1**
Output Power (max.)	+23 dBm	+23 dBm	+23 dBm
Output Power (typ.)	+20 dBm	+20 dBm	+20 dBm
Control Range	20 dB min.	20 dB min.	20 dB min.
Frequency Range	5735-5840 MHz (occupies 5725-5850 MHz)	5741-5834 MHz (occupies 5725-5850 MHz)	5750-5825 MHz (occupies 5725-5850 MHz)

2.2.2 Antenna / Antenna Coupling Unit

	All Models	
Mechanics	External antenna	
Antenna Connection	N-type female	
Impedance	50 ohms	
	2.4 GHz	**5.8 GHz**
Recommended Antenna (not included)	4, 6, or 8 foot parabolic	2, 4, 6, or 8 foot parabolic
Gain & Beamwidth (3 dB)		
2 ft Antenna	N/A	29 dB / 6°
4 ft Antenna	27 dB / 7°	35 dB / 3°
6 ft Antenna	31 dB / 5°	38 dB / 2°
8 ft Antenna	33.5 dB / 3.5°	41 dB / 1.5°

2.2.3 Receiver

	All Models		
Nominal Receive Level	-30 to -60 dBm		
Maximum Receive Level	0 dBm error free, +10 dBm no damage		
Frequency Selection	Rear Panel DIP switches, 7-cavity RF filter assembly		
Processing Gain	10 dB minimum		
	2.4 GHz 1 x E1	**2.4 GHz 2 x E1**	2.4 GHz 4 x E1
Threshold Rx Level (BER = 10^{-6})	-93 dBm	-91 dBm	-89 dBm
Frequency Range	2400 - 2483.5 MHz	2400 - 2483.5 MHz	2400 - 2483.5 MHz
	5.8 GHz 1 x E1	**5.8 GHz 2 x E1**	**5.8 GHz 4 x E1**
Threshold Rx Level (BER = 10^{-6})	-92 dBm	-90 dBm	-88 dBm
Frequency Range	5725 - 5850 MHz	5725 - 5850 MHz	5725 - 5850 MHz

2.2.4 System (Single Hop Performance)

	All Models
Error Floor	10^{-11}
Dispersive Fade Margin	58 dB, typical
Transmission delay	
(radio only)	250 µsec, maximum
(10 mile path)	300 µsec, maximum

System Gain*	--USA--	----------NO EIRP LIMIT ----------		
	2.4 GHz**	2.4 GHz E1*	5.8 GHz 1xE1	5.8 GHz 2xE1
0.6m Antennas	N/A	N/A	160 dB	158 dB
1.2m Antennas	166 dB	169 dB	172 dB	170 dB
1.8m Antennas	174 dB	181 dB	184 dB	182 dB
2.4m Antennas	176 dB	181 dB	184 dB	182 dB

* Subtract 2 dB or 4 dB for the 2xE1 or 4xE1 models respectively

Typical Link Distance* **	0.6m Antennas	1.2m Antennas	1.8m Antennas	2.4m Antennas
No EIRP Limit	≤24 km	≤64 km	≤80 km	>80 km
+6 dBW EIRP	≤8 km	≤16 km	≤24 km	≤32 km

* Same size antenna and 30 meter ½ inch coaxial transmission line (6.6 dB @ 5.8 GHz, 4 dB @ 2.4 GHz) at each end of the link with no EIRP limits.

** (2.4 GHz EIRP limits apply in the U.S.A.)

*** Assumes 30 meter ½ inch coaxial transmission line and same size antennas at each end. Shorter and longer link distances can be accomplished depending on transmission line quality (and diameter), length of transmission line and other more minor factors.

System (Single Hop Performance)

Transmit Frequencies

Channel	2.4 GHz 1xE1	2.4 GHz 4xE1	5.8 GHz 1xE1	5.8 GHz 2xE1	5.8 GHz 4xE1
A1	2410 MHz	2405 MHz	5735 MHz	5730 MHz	5735 MHz
A2	2453 MHz	2446 MHz	5800 MHz	5795 MHz	5800 MHz
B1	2430 MHz	2412 MHz	5755 MHz	5740 MHz	5755 MHz
B2	2473 MHz	2453 MHz	5820 MHz	5805 MHz	5820 MHz
C1	N/A	2419 MHz	5775 MHz	5750 MHz	5775 MHz
C2	N/A	2460 MHz	5840 MHz	5815 MHz	5840 MHz
D1	N/A	2426 MHz	N/A	5760 MHz	N/A
D2	N/A	2467 MHz	N/A	5825 MHz	N/A
E1	N/A	N/A	N/A	5770 MHz	N/A
E2	N/A	N/A	N/A	5835 MHz	N/A
F1	N/A	N/A	N/A	5780 MHz	N/A
F2	N/A	N/A	N/A	5845 MHz	N/A

Receive Frequencies

Channel	2.4 GHz 1xE1	2.4 GHz 4xE1	5.8 GHz 1xE1	5.8 GHz 2xE1	5.8 GHz 4xE1
A1	2453 MHz	2446 MHz	5800 MHz	5795 MHz	5800 MHz
A2	2410 MHz	2405 MHz	5735 MHz	5730 MHz	5735 MHz
B1	2473 MHz	2453 MHz	5820 MHz	5805 MHz	5820 MHz
B2	2430 MHz	2412 MHz	5755 MHz	5740 MHz	5755 MHz
C1	N/A	2460 MHz	5840 MHz	5815 MHz	5840 MHz
C2	N/A	2419 MHz	5775 MHz	5750 MHz	5775 MHz
D1	N/A	2467 MHz	N/A	5825 MHz	N/A
D2	N/A	2426 MHz	N/A	5760 MHz	N/A
E1	N/A	N/A	N/A	5835 MHz	N/A
E2	N/A	N/A	N/A	5770 MHz	N/A
F1	N/A	N/A	N/A	5845 MHz	N/A
F2	N/A	N/A	N/A	5780 MHz	N/A

2.2.5 Digital Line Interface

	All Models
Data Rate	2.048 Mbps
Digital Interface *	CEPT-1
Connector	BNC female unbalanced, 75 ohm (optional 120 ohm balanced balun available)
OR	RJ45/8 balanced, 120 ohm (optional 75 ohm, unbalanced balun available)
Blue Code **	Alarm Indication Signal (AIS)
Remote Loopback	Internal or external test signal (rear panel DIP switch selectable)

* Meets ITU-T G.703.
** Signal is selectable (on/off) and is generated only on data loss or link failure when selected.

	2.4 GHz 1xE1	**2.4 GHz 2xE1**	**2.4 GHz 4xE1**
Digital Capacity	1 x E1	2 x E1	4 x E1

	5.8 GHz 1xE1	**5.8 GHz 2xE1**	**5.8 GHz 4xE1**
Digital Capacity	1 x E1	2 x E1	4 x E1

2.2.6 Auxiliary Connections

	All Models
Orderwire Interface	2-wire, 4-pin modular jack, female (RJ-11)
REN (Ringer Equivalency Number)	1.0 B
DTMF tones	within ±1.5% of nominal freq.
Ringing Voltage	48 VDC, typical
(use telephones with solid state ringers, NOT adequate for older style mechanical ringers)	
VF Orderwire Bridge	600 ohm balanced, 4-wire, 0 dBm, DB-25, male
Diagnostic Port	RS-232/ RS-422 (Craft / TBOS), DB-9, male
Aux Data (clear service channel)	RS-232 / RS-422, ≤9600 baud, DB-9, female
Alarm	2 x Form C, 6 x TTL, DB-25, female
Protect Port	8-pin modular jack female
Test Points	Output Power, near-end and far-end received signal level (RSL)

2.2.7 Temperature and Environment

	All Models
Operating Temperature Range	-30 to +65°C
Humidity	95% non-condensing
Altitude	4,500 meters, maximum

2.2.8 Power

	All Models
DC Input Voltage	±20 to ±63 VDC
Power Consumption	< 45 watts
AC Adapter (optional)	100-250 VAC, 50-60 Hz
Connector	Barrier strip, plug-in type

2.2.9 Regulatory Information

	2.4 GHz 1xE1*	2.4 GHz 2xE1	2.4 GHz 4xE1
FCC Identifier	HZB-LYNX42	TBD	TBD
FCC Rule Parts	15.247	15.247	15.247
Industry Canada ID	522 102 415A	TBD	TBD
IC Rule Parts	RSS 210	RSS 139	RSS210
ETSI	ETS 300-328 & -826	ETS 300-328 & -826	

	5.8 GHz 1xE1*	5.8 GHz 2xE1*	5.8 GHz 4xE1*
FCC Identifier	HZB-LYNX56	HZB-LYNX66	HZB-LYNX96
FCC Rule Parts	15.247	15.247	15.247
Industry Canada ID	2028 102 237	522 102 426	522 102 826
IC Rule Parts	RSS 210	RSS 210	RSS 210

* Approved and/or Certified in many other countries (consult factory)

2.2.10 Mechanical

	All Models
Width (for 19-inch EIA rack mounting)	437 mm (17.2") rack mounting brackets supplied
Height	89 mm (3.5") (2RU)
Depth	368 mm (14.5")
Weight	5 kg. (11 lbs.)

2.3 Front Panel Description

2.3.1 General

The *LYNX.sc* radio front panels, as shown in Figure 2-1 through 2-3, have LED indicators, test points, controls and connections that are used for installation, maintenance, operation and troubleshooting. Prior to installation, it is best to be familiar with the front panel of your particular model. Sections 2.3.2 through 2.3.5 briefly describe the front panel access and lights from left to right.

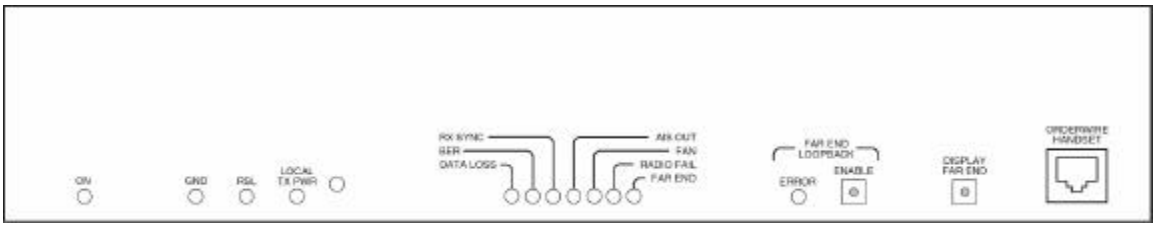

Figure 2-1: Front Panel, 2.4 GHz & 5.8 GHz 1xE1

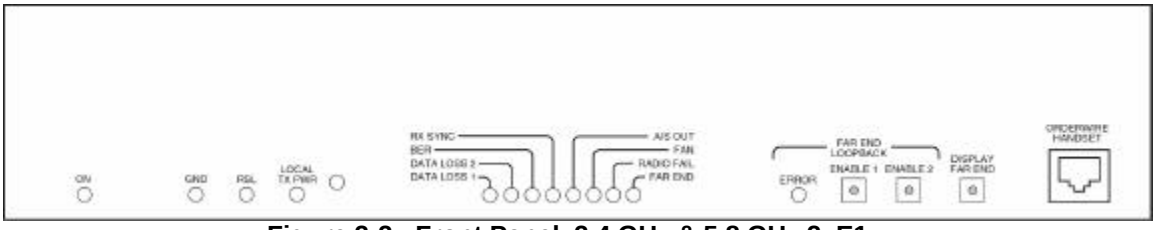

Figure 2-2: Front Panel, 2.4 GHz & 5.8 GHz 2xE1

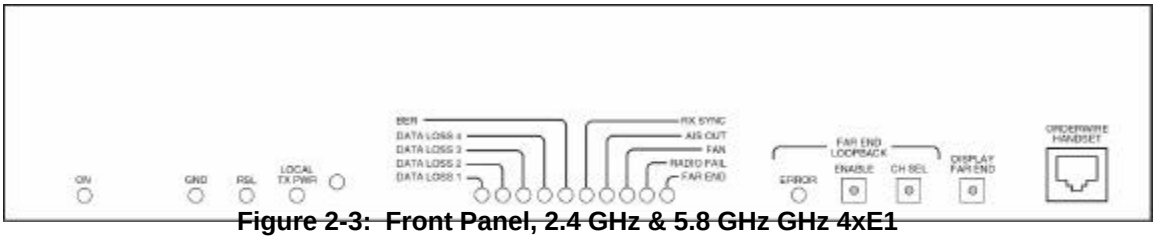

Figure 2-3: Front Panel, 2.4 GHz & 5.8 GHz GHz 4xE1

2.3.2 Test Points / Power Indicator

ON This is an LED indication. When lit GREEN, the *LYNX.sc* is powered.

The LYNX.sc radio products do not have an on/off switch.

GND This is a test point referenced to chassis ground. This is used in conjunction with the next two test points to measure voltages related to radio performance.

RSL This is a test point which relates to the Received Signal Level (RSL). A voltage can be measured with a voltmeter (using the GND test point for reference) which corresponds to the actual power level of the incoming received signal. While the DISPLAY FAR END button is pressed, this RSL voltage corresponds to the RSL of the far-end radio. These measurements are used during installation, maintenance and troubleshooting.

LOCAL TX PWR This is a test point which corresponds to the output transmit power of the radio. A voltage can be measured with a voltmeter (using the GND test point for reference) which corresponds to the actual power level of the outgoing signal. This measurement is used during installation, maintenance and troubleshooting

This voltage only applies to the near-end and does not allow measurement of the far-end output transmit power, even when the DISPLAY FAR END button is pressed.

There is a receptacle on the front panel to the right of the LOCAL TX PWR test point which is an installation adjustment allowing the output transmit power to be increased or decreased within the radio's specified limits. Using a small screwdriver, this adjustment is used to set the output power of the transmitter, in accordance to the path planning.

The LYNX.sc systems requires professional installation. Transmitted output power limits may apply when using this radio. Consult FCC, IC, ETSI Western Multiplex or other regulatory authorities for limits which may apply. See Section 3.13.1 for details on setting output power.

2.3.3 Alarm and Status Indicators

DATA LOSS When lit RED, this is an alarm condition indicating that the *LYNX.sc* radio is not receiving E1 input data on the corresponding data input channel. This alarm function can be disabled by rear panel DIP switch setting (see Section 2.4.4). Under data loss condition, the local transmitter injects AIS (Alarm Indication Signal).

BER This is the Bit Error Rate (BER) alarm. When lit RED, this alarm condition indicates that the received signal bit error rate is above the error threshold of 1×10^{-6}. This alarm condition typically indicates a path problem or a problem with the far-end radio and usually is not a problem with the near- end radio.

RX SYNC When lit RED, this is an alarm condition indicating that the intended received signal is not being received. This alarm may indicate problems related to the path, connections, or the near-end or far-end radio hardware. When the RX SYNC alarm is active, AIS (Alarm Indication Signal) is injected into the E1 line transmit output data port.

AIS OUT When lit RED, this is a status condition indicating that the radio receiver is transmitting AIS (Alarm Indication Signal) on the E1 line transmit output data port, due to loss of received signal. This typically indicates a path or connection problem or a near-end or far-end radio hardware problem. This alarm function can be disabled by rear panel DIP switch setting (see Section 3.12.5).

FAN When lit RED, this is an alarm condition indicating a failure with one or both of the internal cooling fans. The radio is designed to operate within specification when only one fan is operating. The two fans are provided for redundancy only.

RADIO FAIL When lit RED, this is an alarm condition indicating a major failure with the near-end radio hardware. It can also indicate improper connections to the CEPT-1 input port.

FAR END When lit RED, this is an alarm condition indicating that there are alarm or status conditions present on the far-end radio. Press and hold the "Display Far End" button on the near-end radios to indicate the alarm conditions for the far-end radio terminal. Monitoring the far-end alarms can be helpful for radio installation and routine maintenance.

2.3.4 Controls

Loopback is a test method used which transmits either an internal or external E1 test signal and loops this E1 signal back at the far-end radio (re-transmits the signal back to the near end). The near end then receives the signal. This is very useful for testing because the test signal can be monitored at the near-end and the quality of the entire link can be measured using a Bit Error Rate (BER) test, or internal test features, without anyone going to the far-end radio location.

ERROR When lit RED, this indicates that a bit error occurred while in loopback mode. If you are not using a BER test set, this LED may be observed to determine if there are any bit errors during loopback, for example during an overnight test.

ENABLE This is a push-button switch that executes the loopback mode for the corresponding channel. Loopback is initiated by pressing and holding this switch for approximately 3 seconds. Once in loopback mode, the LED which is embedded in the switch is illuminated YELLOW to indicate that Loopback is ON. The LED on the near-end radio flashes while the far-end is solid. Loopback is disabled by pushing and releasing the ENABLE button at either the near-end or far-end radio.

Enabling loopback will interrupt traffic. This is an out-of-service test.

CH SEL This is a push-button switch provided only one the 4xE1 version that selects the channel for loopback mode. The channel is determined by the number of times the switch is pressed. Press (hold for 2 seconds and release) for channel 1, press again for channel 2, press again for channel 3 and press again for channel 4. Loopback is initiated using the ENABLE switch; the LED in the CH SEL button flashes in a group sequence to identify which channel is selected for loopback.

DISPLAY FAR END This push-button provides the capability to determine alarms and status of the far-end radio. When pressed and held, the alarm and status LEDs and the RSL test point correspond to the far-end radio's status and RSL value. This can be used for installation, maintenance and troubleshooting. When the LED on this switch is flashing, no far-end information is available. This typically indicates that there is no link between near-end and far-end radios.

2.3.5 Connections

ORDERWIRE

This connection is used to access the orderwire function. This is a facility for "telephone" style service from one radio to another. A standard electronic telephone [one with a handset and DTMF (push-button tone) dialing] plugs into this connector. The user can dial the orderwire address of the far-end radio (or any radio in the *LYNX.sc* network) to establish telephone communication between sites. This communication does not interrupt or interfere with the other radio communications. The radio link must be operational to use this facility. The orderwire feature can be very useful for installation, maintenance and troubleshooting.

- Touch-tone Telephone* (for communication with far-end)

*Telephone connection specifications:

REN (Ringer Equivalency Number)	1.0 B
DTMF tones	within ±1.5% of nominal freq.
Ringing Voltage	48 VDC, typical

(Ringing voltage is adequate for modern solid state ringers, NOT for the older mechanical type ringers)

2.4 Rear Panel Description

The *LYNX.sc* radio rear panel, as shown in Figures 2-4 through 2-6, has connections and DIP switches that are used for installation, maintenance, operation and trouble-shooting. Prior to installation, you should familiarize yourself with the rear panel.

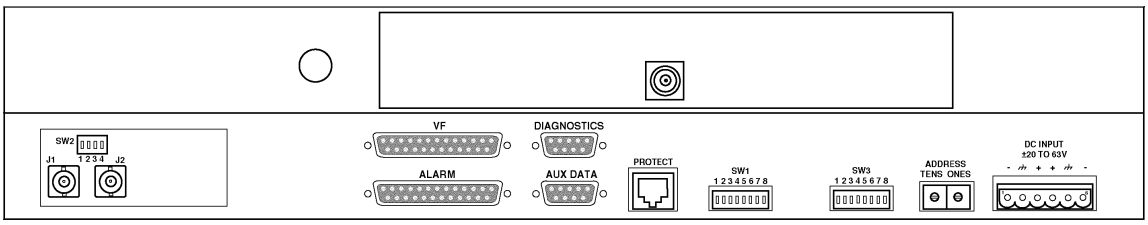

Figure 2-4: Rear Panel, 1xE1

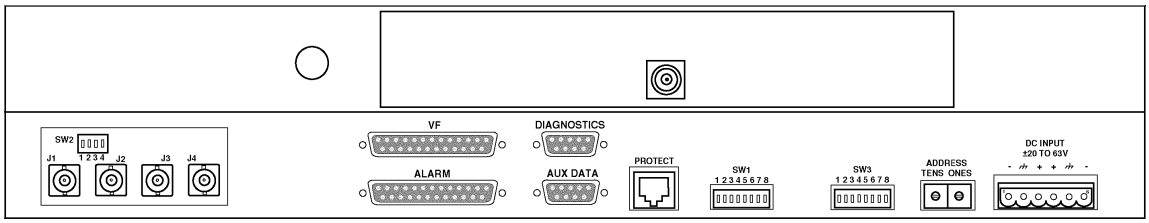

Figure 2-5: Rear Panel, 2xE1

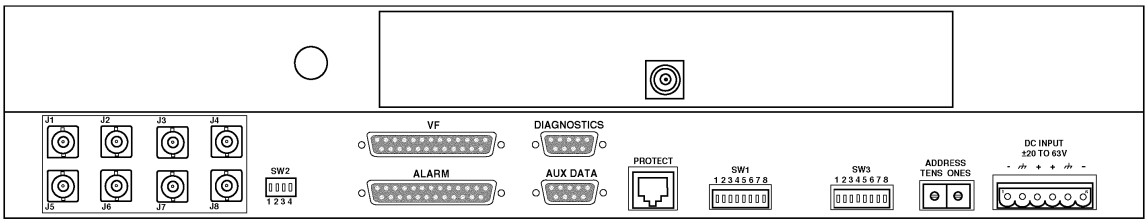

Figure 2-6: Rear Panel, 4xE1

2.4.1 RF Connection

The RF port of the *LYNX.sc* radio is an N-type female connector that is an integral part of the filter assembly. The filter assembly occupies nearly the entire top half of the rear panel. The N-Type connector is used to connect the antenna, typically using coaxial transmission line. In some cases, waveguide may be used as the primary transmission line, in which case a waveguide-to-N adapter is required.

For the LYNX.sc, 1/2" or 5/8" coaxial cable (LDF4-50 or LDF4.5-50) is recommended. Coaxial cable that is 7/8" or larger can exhibit moding at 5.8 GHz and is not recommended for 5.8 GHz radios. For waveguide transmission line at 5.8 GHz, EW-52 waveguide is recommended. EW-63 will also work, but may exhibit more loss.

2.4.2 DATA Connections

The connection for the CEPT-1 (E1) interface is shown in Figure 2-7 as J1 through J4 (additionally J5 through J8 on the 4xE1 model). These connections carry the E1 signals in and out of the radio. Multiple capacity (2xE1 and 4xE1) provide extra sets of input and output ports to connect each E1 signal.

The BNC data ports accept bipolar signals with the shield normally left open (floating) in order to eliminate ground loop problems. If desired, the BNC shield on the data ports may be grounded using switch settings on SW2.

For balanced E1 input, use a 120 ohm balun and BNC cables to provide a RJ45 4-wire connection. SW2 has no effect when using the typical balun.

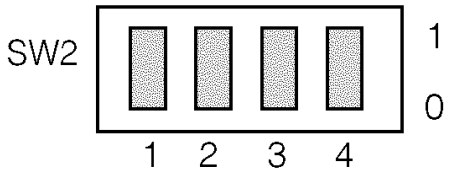

Figure 2-7: CEPT-1 Interface Grounding Switch

2.4.3 Auxiliary Data Connections

There are 5 auxiliary data connections for *LYNX.sc* as shown in Figure 2-4 through Figure 2-6.

VF This connector is used to link two *LYNX.sc* radios at a repeater site for Orderwire operation. This would allow orderwire "telephone" calls to and from any point in the *LYNX.sc* network.

The LYNX.sc orderwire circuit can also be connected to other existing orderwire networks. See Section 3.14.1 for details.

ALARM This connector is used for monitoring alarms electrically. The alarm connections are essentially the same as described for the front panel, however instead of LED operation, alarm status is provided electrically by means of TTL and Form C relay connections. The TTL and Form C relays can be connected to other transmission equipment for monitoring alarm status locally or remotely.

DIAG-NOSTICS This is a serial interface port (RS-232 or RS-422, ≤9600 baud) to the *LYNX.sc* radio. This port provides maintenance information about the *LYNX.sc* radio(s) to a connected computer or terminal. This port is typically used for maintenance and troubleshooting or connection to network management systems.

AUX DATA This is a serial interface port (RS-232 or RS-422, ≤9600 baud) which allows the user to connect auxiliary serial data from one point in the radio network to another. This facility can also be used for bridging the DIAGNOSTICS port for remote alarm and status monitoring (TBOS network management) or for connecting other equipment's serial alarm information. It can alternatively be used for separate data connection for LANs or other serial devices.

PROTECT This is a port used to connect the *LYNX.sc* radio to an additional unit for Monitored Hot Standby (MHS) or Space Diversity (SD) configuration. The MHS and SD units can be configured to provide protection to the *LYNX.sc* radio by means of a "back-up" radio which would switch-in should there be problems with the primary radio or the radio path.

The protect feature is not available at the time of the printing of this manual

2.4.4 Switches

There are two sets of 8-segment DIP switches (SW1 & SW3) and two rotary switches (Address TENS and ONES), as shown in Figures 2-4 through 2-6 on the rear panel of the *LYNX.sc* radio. These switches provide user configuration of several radio parameters. A brief explanation for each function follows.

Refer to the switch setting detail in Appendix B for your particular model.

SW1

Input Alarm Disable These switch segments allow the user to "turn off" the DATA LOSS alarm for any input channel. This can be helpful if the data channel is not in use or while performing maintenance to temporarily turn off the alarm indication. Even when this alarm is disabled, the *LYNX.sc* radio will inject AIS into the transmitted data stream when there is a data loss condition. (see Section 3.12.4)

Loopback Mode This switch segment allows the user to select either the internal or an external test signal while in loopback mode. (see Section 3.12.2)

Error Unlatch This switch segment selects an optional mode for the ERROR LED to flash for each error occurrence (instead of latching on). This can be useful for short duration loopback testing when the operator is located at the terminal site and watching for errors. (see Section 3.13.3)

AIS Disable This switch segment allows the user to select whether or not an AIS signal will be automatically injected into the received E1 data stream at BER $\geq 1 \times 10^{-3}$. This can be useful for measuring threshold or when a E1 channel is not in use. The AIS will be injected into the received E1 data stream if the radio loses sync (RX SYNC alarm active), even if the AIS disable function has been selected. (see Section 3.12.5)

Diag-nostic Protocol This switch segment is default set to Telemetry Bit Oriented Serial (TBOS) mode on the diagnostics port. This is a non-proprietary network management protocol which is common to some radio networks. The other selection is for factory use only. (see Section 3.14.3)

Enable Aux Data This switch segment allows the AUX DATA port to be optionally used as a clear service channel for RS-232 or RS-444 (≤ 9600 baud) user data. The radio normally "bridges" the AUX DATA port to the DIAGNOSTICS PORT for TBOS radio network management. (see Section 3.14.4)

SW2

Interface Connection

These switch segments allow the user to have the shield of each CEPT-1 input connection either grounded or floating. The shield is normally “floating” to eliminate ground loop problems. (see Section 3.11)

SW3

Spreading Code

This set of switch segments allow the user to select the spreading code for the spread spectrum signal. Both ends of a radio system must be set to the same code. Users may wish to change codes for radios that are nearby other similar radios to aid in interference rejection. (see Section 3.12.3)

Channel Selection

This set of switch segments programs the radio to match the specific RF channel corresponding to the RF filter set which has been installed. (see Section 3.12.1)

Address

There are two rotary switches which determine the radio's address (01 to 99). This address is used for Orderwire signaling and for the DIAGNOSTICS port TBOS address. (see Section 3.14.1)

Refer to Appendix B for Switch Settings

2.5 Installation Accessories

The *LYNX.sc* radio is shipped with several accessories commonly required for the radio as described below:

AC Power Supply	If ordered as an option, this power supply provides AC to DC conversion for use with AC powered locations.
AC Power Cord	This power cord connects the AC Power Supply, if ordered, to a standard 115V U.S. AC outlet.
Rack Mount Brackets	Two brackets (along with required mounting screws) are provided which allow 19-inch rack mounting of the *LYNX.sc* radio.
Terminal Connector	This is a 6-pin mating connector used for DC power supply.
D Connector 9-pin	Two of these mating connectors are provided. One is used for the DIAGNOSTICS port interface and another for the AUX DATA port.
D Connector 25-pin	There are 2 mating connectors provided, one for the ALARM interface and the other for the VF interface.
RF Power Adjustment Cover	A small plastic cap is provided which is placed over the RF output power adjustment receptacle once output power has been set by professional installation personnel.

Other accessories are available, such as orderwire handsets, connector adapters and special cables. These can be ordered separately upon request.

Your Notes on the *LYNX.sc* Radio

3. Installation & Adjustments

3.1 Shipping Container

The equipment is shipped in boxes unless ordered as an integrated system and configured at the factory, in which case the equipment may be racked and shipped in a crate. The equipment is packaged so as to prevent damage in transit.

The boxes should be left intact and sheltered until arrival at the installation site.

If the shipping container shows signs of damage, the transportation company should be notified immediately. Extra care and inspection of the contents is advised immediately upon receipt.

It is recommended that all the packaging materials be retained**. In the unlikely event that the equipment must be returned to the factory, use the original packing materials for return shipment. **The original packaging materials are also recommended for transporting the equipment from location to location.

Inside the primary shipping containers, internal boxes may contain other items. These boxes should also be saved for future use.

Also, save the LYNX.sc radio test data sheet that is provided. The test data sheet can be placed where the LYNX.sc terminal will be installed for future quick reference. This sheet could also be placed in the front pocket of this manual, and the manual kept at the radio location for future reference. All LYNX.sc units are individually tested and the actual measured performance recorded on the Factory Test Data Sheet. You will find this information to be of use during installation, troubleshooting and maintenance.

A set of quick installation instructions is also provided which can be useful for easy reference during installation.

3.2 Packing Items Identification

The primary shipping container houses the radio and an additional box. The box contains several related items inside including:

- This manual
- Installation accessory kit (see Section 2.5)

3.3 Before Installation Task List

There are several tasks that should be accomplished prior to installing the *LYNX.sc* radio system. This section briefly describes the following:

- Site selection
- Line-of-Sight and Path Clearance determination
- Anticipated RSL calculation
- Fade margin calculation
- Availability calculation
- Frequency plan determination
- Power supply planning
- Antenna (and accessories) purchase

Only directional antennas should be used with LYNX.sc spread spectrum radios. These can be grid or solid parabolic antennas (minimum 2 foot - .6 meter). Flat panel antennas are also acceptable if the beam width is kept to a minimum.

3.3.1 Site Selection Requirements

The radio site must have:

- access to the appropriate power
- close proximity to the telephone or computer system you wish to interconnect
- line-of-sight to the other radio location with adequate clearance
- location for mounting the antenna

3.3.2 Line-of-Sight and Path Clearance Guidelines

The *LYNX.sc* radios will not operate properly unless they have line-of-sight between their corresponding antennas. The *LYNX.sc* radio transmission will not pass through trees or other obstacles. Factors to consider include:

- Earth curvature
- Future growth of trees
- Height of buildings

In addition to the line-of-sight requirement, a well-engineered path will also have additional path clearance to allow for signal loss due to partial obstructions, atmospheric ducting and ground reflections. To maximize radio reception, 0.6 times the first Fresnel zone should be calculated and this distance added to the path clearance (in addition to trees or buildings).

3.3.3 RSL Calculation and Link Budget

The received signal level (RSL) can be estimated using the following formula:

$$RSL\ (dBm) = P_{out} - FL_1 + G_1 + G_2 - FL_2 - L_p$$

where: P_{out} is the transmitter output power (in dBm)

FL_1 is the feeder loss of the transmit side (in dB)

G_1 is the gain of the transmit antenna (in dB)

G_2 is the gain of the receive antenna (in dB)

FL_2 is the feeder loss of the receive side (in dB)

L_p is the Path loss, defined by:

$$L_p\ (dB) = 96.6 + 20 \log_{10}F + 20 \log_{10}D$$

where: F = Frequency in GHz (2.4 or 5.8)

D = Distance of path in miles

This link budget is very important for determining any potential problems during installation. If you have calculated the expected RSL, you can see if it has been achieved during installation, and troubleshoot if necessary.

In the USA, 5.8 GHz models of the LYNX.sc may be installed with any size directional antennas and operated at full power. The 2.4 GHz model may require power reduction where: $P_{out} - FL_1 + G_1$ is replaced by $30 - [(G_1 - 6)/ 3] + FL_1$

In some countries effective isotropic radiated power (EIRP) limits apply, such as +6 dBW (+36 dBm) in Canada. Output power may need to be reduced, and the above path planning equation changed such that: EIRP (dBm) = $P_{out} + G_1 - FL_1$

3.3.4 Fade Margin Calculation

The fade margin is the difference between the actual received signal and the radio's threshold. Using the formula provided in Section 3.3.3, the anticipated RSL can be calculated. Compare this RSL to the specified threshold of the *LYNX.sc* radio, which is shown in Section 2.2, and calculate the fade margin as the difference between the two signal levels.

Dispersive fade margin is another factor that many microwave path engineers may use to plan their link budget. For the *LYNX.sc* radio, the dispersive fade margin is in excess of 55 dB and therefore is not a determining factor in path planning. This excellent dispersive fade margin performance is important because the spread spectrum RF signal has considerably wide bandwidth.

3.3.5 Availability Calculation

Availability of the microwave path is a measure of the percent of the time that the link will operate without producing an excessive BER due to multipath fading. In the absence of direct interference, availability is affected by the following:

- Path length
- Fade margin
- Frequency (2.4 GHz or 5.8 GHz in the case of the *LYNX.sc* radios)
- Terrain (smooth, average, mountainous)
- Climate (dry, temperate, hot/humid)

Depending on the type of traffic carried over the link, the system designer may wish to design for a specific availability. For example, if the data or voice traffic that is carried by the radio is critical then it may be designed for a very high availability (e.g. 99.999% or 5.3 minutes of outage per year). To improve availability, for example, the fade margin can be increased by making the path shorter, or by using higher gain antennas in conjunction with lower loss feeders (by using high quality transmission line or shortening feed length).

3.3.6 Frequency Plan Determination

When configuring radios in a hub or repeater configuration, careful engineering of the *LYNX.sc* radio frequency plans and antenna locations should be performed in order to minimize potential interference between the nearby radios. As a rule of thumb, do not place identical frequency plan radios (*e.g.* two “A” channel radios) at the same site. In most cases, it is desirable to use a different frequency plan (*e.g.* A versus B). However, with careful engineering, placing more than one radio of the same frequency channel plan at the same site can be accomplished. In fact, the *LYNX.sc* frequency plan is designed to allow complex hub configurations that may require re-using the same frequency plan. When designing these types of configurations, antenna size and antenna location are critical. If identical channel plans must be used at the same site, the same radio channel (*e.g.* A1 and A1) should be used at a site to minimize interference. Using alternate channels (*e.g.* A1 and A2) is less likely to be successful (and therefore not recommended) due to the high level of transmitter to receiver isolation required from the antenna system.

Sometimes it is required to locate the *LYNX.sc* radio nearby a transmitter that is the same as, or close to the *LYNX.sc* receive or transmit frequencies. In this case, the *LYNX.sc* terminal that should be placed closest to this interfering transmitter should be the specific terminal with the receive frequency which is furthest from this unwanted transmitted frequency. This approach minimizes the potential of interference. While interference conditions are rare when using the *LYNX.sc* radios, cases of interference may be overcome by exchanging the radios from end to end or simply reinstalling the filter unit, as described in Section 4.2 (thus swapping the frequencies of both ends of the radio link). In some cases, changing frequency plans (e.g. from A to B) can also help mitigate any interference.

Section 4.8 of this manual describes interference countermeasures in further detail.

3.3.7 Power Supply Planning

The *LYNX.sc* radio must have access to a supply of appropriate power, either DC or AC (if the AC adapter option has been ordered). The *LYNX.sc* can be powered from a DC battery system, or from a solar or generator power plant, usually with battery reserves. Typically either a positive or negative ground 24 or 48 volt supply is used. For DC, be sure the cable is of sufficient gauge to carry the necessary current and it is less than three (3) meters (9.75 feet) in length.

Before installing the radio, plan for the continuous power consumption needs in accordance with the specifications given in Section 2.2 of this manual. It is also wise to plan for backup power for critical communication circuits (including the *LYNX.sc* radio). Backup power allows the radios and associated equipment to continue operation when primary power is interrupted.

3.3.8 Antenna Planning

Using the path planning tools, proper antenna size can be determined which will yield the desired path performance. In general, the larger the antenna that is used with the *LYNX.sc* radio, the better the link will perform. Larger antennas have narrower beamwidth and higher gain, which will yield better link performance (higher fade margin, better availability) and improve immunity to interference (due to the smaller beamwidths). However, larger antennas are more costly to purchase and install than smaller antennas, in some cases requiring special equipment for installation. All of these factors should be taken into consideration when selecting antennas.

In areas where transmitted output power restrictions apply, the use of larger antennas will maintain the benefit of narrow beamwidths and receive gain. However, output power may need to be reduced to meet regulations. (See Section 3.13.1)

Prior to installation, the specific antenna location and mounting should be determined. This advanced planning also yields the transmission line requirements.

Only directional antennas should be used with LYNX.sc spread spectrum radios. These can be grid or solid parabolic antennas (minimum 2 foot - .6 meter). Flat panel antennas are also acceptable if the beam width is kept to a minimum.

3.4 Tools Required

The following tools may be required for the installation of the *LYNX.sc* radios:

- Phillips (cross tip) screwdrivers (for 19-inch rack mounting and attachment of brackets)
- Small blade standard screwdriver (for power supply connector and RF output power adjust)
- Soldering iron (if using any D-type connectors)
- Wire strippers (for removing insulation from power supply and other wiring)
- Digital Voltmeter (to measure RSL, Tx output power, Alarms)

The following tools are recommended for the installation of the *LYNX.sc* radios:

- RF power meter (to measure transmitter output power)
- Cellular phone or two-way radio (for talking with far-end crew and tower crew)
- Bit Error Rate test set (to test link after installation)
- Touch-tone Telephone* (to test orderwire circuits and for communication with far-end)

Additional tools will likely be needed for antenna and transmission line installation and antenna alignment. Consult Sections 3.8 through 3.10 of this manual for more details.

*Telephone connection specifications:

REN (Ringer Equivalency Number)	1.0 B
DTMF tones	within ±1.5% of nominal freq.
Ringing Voltage	48 VDC, typical

(Ringing voltage is adequate for modern solid state ringers, NOT for the older mechanical type ringers)

3.5 Frequency Channel Plans

The *LYNX.sc* system offers several non-overlapping channel plans for the different models of radio. This channel plan arrangement allows users to implement *LYNX.sc* systems in the proximity of other *LYNX.sc* radios (planned or unplanned), hub and repeater applications, and can be used to mitigate interference. The channel plans are illustrated below in Figures 3-1 through 3-6. Section 4.2 and 4.3 describe how to change frequency channel assignments of a *LYNX.sc* radio.

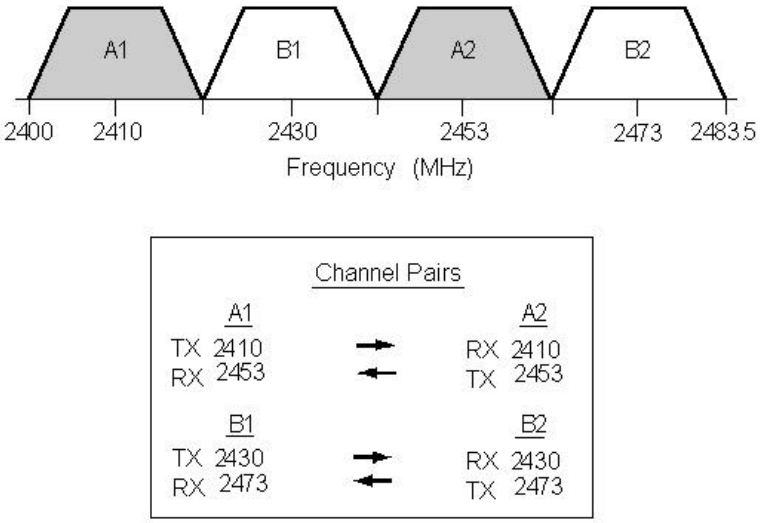

Figure 3-1: Channel Plan, 2.4 GHz 1xE1

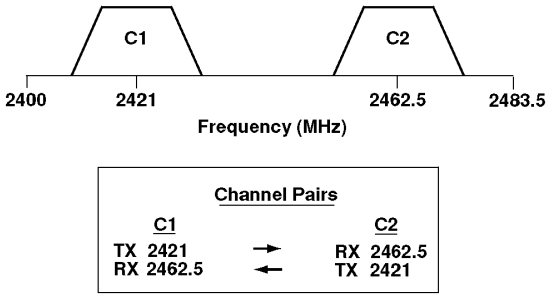

Figure 3-2: Custom Channel Plan, 2.4 GHz E1

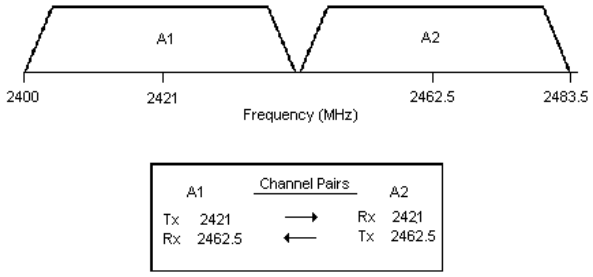

Figure 3-3: Channel Plan, 2.4 GHz 2xE1

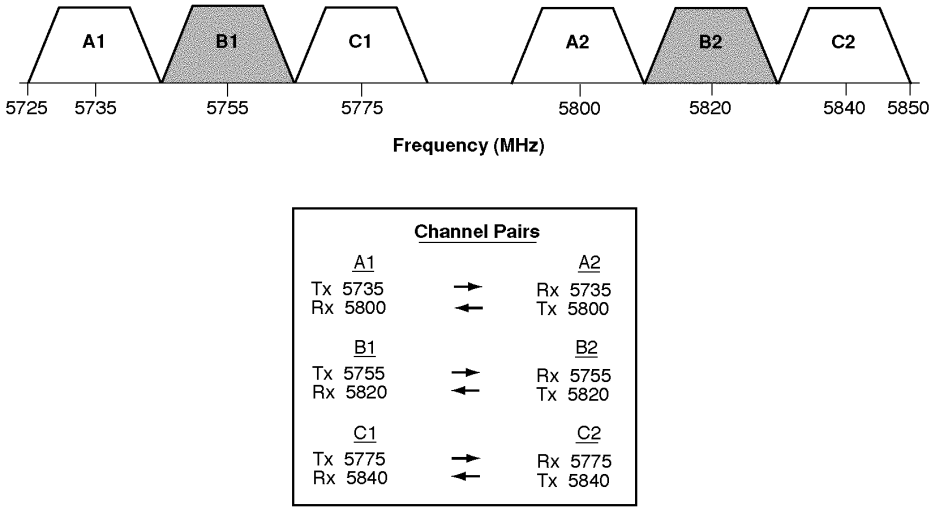

Figure 3-4: Channel Plan, 5.8 GHz 1xE1

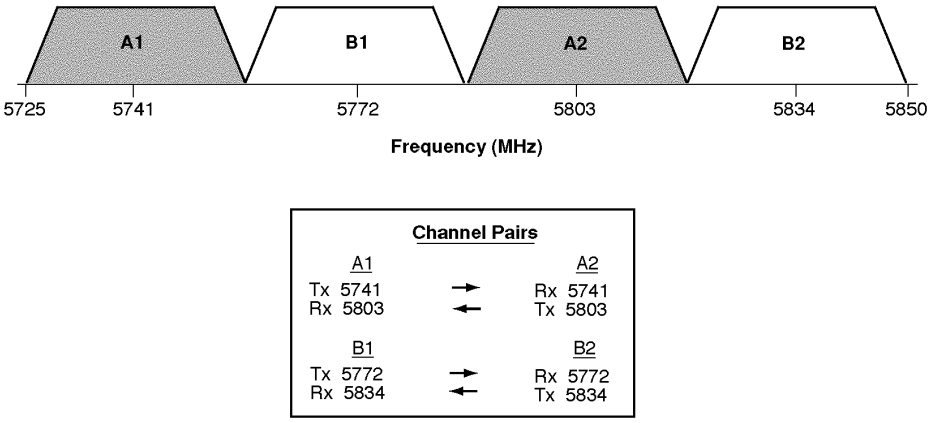

Figure 3-5: Channel Plan, 5.8 GHz 2xE1

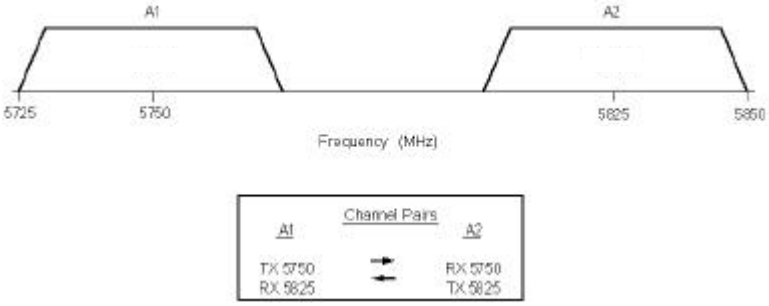

Figure 3-6: Channel Plan, 5.8 GHz 4xE1

3.6 Mounting the *LYNX.sc*

The *LYNX.sc* radio can be mounted at any height in a standard 19-inch rack. Blank rack-mounting spaces above and below the *LYNX.sc* are recommended, especially if the surrounding equipment dissipates a considerable amount of heat (over 50W).

The *LYNX.sc* radio may be set up for mounting with the front edge projecting from the front face of a standard 19-inch rack using the rack mounting brackets enclosed with the screws in the Accessory Kit (4 per bracket). The rack mounting brackets may be reversed, in order to install for flush or cabinet mounting if preferred. Depending on rack configuration, it may be necessary to remove the four adhesive backed rubber feet on the bottom of the unit.

The LYNX.sc radio has internal fans which intake and exhaust on the left and right sides of the chassis. When rack mounting, it is important to leave a small gap between the outer edges of the radio and the inside edge of the rack.

The LYNX.sc radio may alternatively be placed on a table or shelf attached to a wall. Because of the low weight of the LYNX.sc, any mounting option other than rack mounting will be less secure.

3.7 Power Connection and Wiring

There is no ON/OFF switch on the LYNX.sc. As soon as power is applied, the equipment will be operational. This means that there can be up to 1W of RF power present at the antenna port. The antenna port should be terminated before power is applied.

Power is connected using the DC power plug contained in the Accessory Kit. Use Table 3-A or 3-B along with the associated diagram of Figure 3-7 or 3-8 to connect the DC power cables. For example, for a negative DC power input, use Table 3-A and Figure 3-7.

NEGATIVE DC POWER INPUT (–20 TO –63 VDC)	
PIN	**FUNCTION**
1	**Power (–DC)**
2	**Ground (see figure 3-7)**
3	**Return (+DC)**
4	**Return (+DC)**
5	**Ground (see figure 3-7)**
6	**Power (–DC)**

Table 3-A: DC Power Connection for Negative Supply

POSITIVE DC POWER INPUT (+20 TO +63 VDC)	
PIN	**FUNCTION**
1	**Return (–DC)**
2	**Ground (see figure 3-8)**
3	**Power (+DC)**
4	**Power (+DC)**
5	**Ground (see figure 3-8)**
6	**Return (–DC)**

Table 3-B: DC Power Connection for Negative Supply

Pins 1 and 6 are connected together on the motherboard. Either pin may be used to apply (-DC) DC power input. Similarly, pins 3 and 4 are connected together on the motherboard and may be used to apply (+DC) DC power input.

For DC power return connection, connect to the opposite voltage (either the -DC or the +DC Pin) and connect the return to ground at the DC power plug on pins 2 and/or 5.

3.7.1 DC Power Wiring

Connect the power cable with adequate current rating (minimum of 20 AWG) to the terminals shown on the removed (not plugged into the radio) DC power plug using the screw connections. The recommended minimum current rating of external fuses and cables is 3 Amps. The *LYNX.sc* radios consume less than 1 Amp at ±48V and less than 2 Amps at ±24V. Be sure the DC power cable is less than 3 meters (9.75 feet) in length.

Each LYNX.sc terminal should be externally fused separately with a 5 Amp maximum fuse. The DC power cable must be less than three (3) meters in length.

If using **negative** power, connect the negative voltage to pins 1 or 6. Connect the ground return connection to pins 3 or 4. See Figure 3-7.

If using **positive** power, connect the positive voltage to pins 3 or 4. Connect the ground return connection to pins 1 or 6. See Figure 3-8.

The **ground** connection is available at pins 2 and 5. Either pin may be used to ground the return side of the power supply. Do not ground both sides of the power supply.

Proper grounding, either through the chassis and/or the power supply, can be very important for protection from lightning. A grounding screw hole is provided on the rear panel.

The ground connection may be left floating if the power supply is referenced to ground externally and to avoid ground loops in some configurations. However, this may not provide adequate grounding for lightning protection.

Use a DVM (digital voltmeter) to verify voltage and polarity on the DC power plug.

Do not connect the DC power plug to the rear of the LYNX.sc terminal until a load is connected to the antenna port (either an RF pad, or an RF cable and antenna).

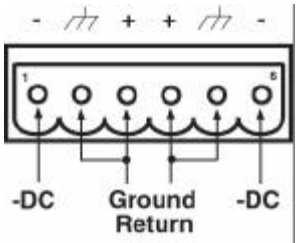

Figure 3-7 Connection

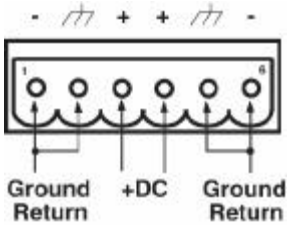

Figure 3-8: Positive Voltage DC Connection

Make sure that when connecting the mating plug that it is properly oriented (terminal screws pointing up) and securely fastened.

3.7.2 AC Power Connection

The optional AC power supply operates from any AC voltage 100V - 250V and 50 Hz or 60 Hz. The AC supply is equipped with a mating connector that plugs directly into the *LYNX.sc* radio and an AC cord with a 3-pin AC plug. The AC cord color code is shown in Figure 3-9 in case users wish to replace the AC plug supplied with a different type of plug.

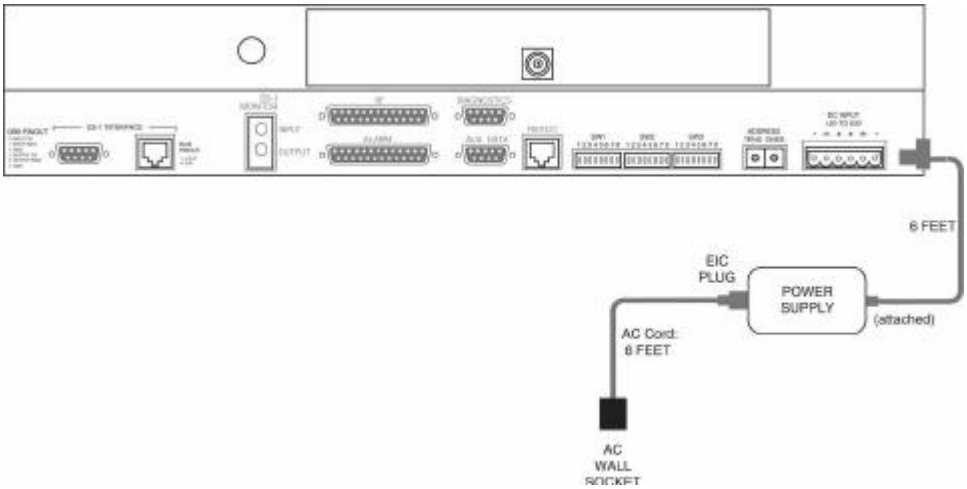

Figure 3-9: AC Connection

3.8 Antenna Connection

The *LYNX.sc* radio is equipped with an N-type female connector at the antenna port located on the rear panel. A short length (~6 feet) jumper cable such as RG-214 coax (or "pigtail") fitted with two N-type male connectors can be used to connect the antenna port to the antenna transmission line (see Section 3.9). The recommended cable type for a jumper is RG-214.

A low loss 50-ohm cable (for example LDF4-50 1/2 inch coax) or EW-52 waveguide (for 5.8 GHz radios) is recommended for the antenna transmission line between the top of the rack and the antenna. The return loss presented by the transmission line at the top of the rack should be as high as possible (20 dB, minimum recommended). The length of the antenna transmission line should be kept as short as possible (to minimize losses).

For 5.8 GHz radios, to minimize feeder losses, the use of 5.8 GHz elliptical waveguide is recommended (typical loss is 1.25 dB/100 ft) for feeder lengths in excess of 200 feet. Depending on path length and feeder length, 1/2 inch coax cable can be used with 5.8 GHz radios.

For the LYNX.sc radio, 1/2" or 5/8" coaxial cable (LDF4-50 or LDF4.5-50) is recommended. Coaxial cable 7/8" or larger can exhibit moding at 5.8 GHz and is not recommended for 5.8 GHz radios. For waveguide transmission line at 5.8 GHz, EW-52 waveguide is recommended. EW-63 will also work, but may exhibit more loss.

Do not use right angle N-type connectors with the 5.8 GHz LYNX.sc radios: they may present high loss at 5.8 GHz. Do not use a low quality N-type jumper cable with the LYNX.sc. Some cable types, such as RG-8, may have high loss at 5.8 GHz.

3.9 Transmission Line Connection

The transmission line feeder (such as LDF4-50 1/2 inch coax cable or EW-52 elliptical waveguide) should be prepared first by cutting to the approximate length (allowing some excess) and installing the appropriate connector on the antenna end.

The prepared transmission line is then pulled through the cable ducts, trays or conduit (as required) to the antenna, while being careful not to kink or damage the transmission line in any way.

The transmission line should be supported in a tray on horizontal runs and by hangers on vertical runs. Hangers should be spaced according to the manufacturer's instructions (typically every 5 feet under conditions of no ice and not greater than 85 mph winds).

The transmission line should be grounded using the manufacture's recommended grounding kit. Grounding kits attach to the outer copper conductor. Grounds must be installed at the antenna, at the bottom of the tower (if applicable) and where the transmission line enters the building. Long transmission line runs should be grounded every 100 feet. In areas of high incidence of lightning, dissipaters should be attached to antennas. In addition, coaxial, in-line, spark-gap type, lightning suppressors should be added at the bottom of the coax cable before entering the building/enclosure.

Any in-line lightning protection device must be rated for the operating frequency of the LYNX.sc (2.4 or 5.8 GHz).

After installation, the transmission line is terminated with an N-type male connector/adapter attached at the equipment end. For waveguide, this typically requires a CPR-to-N adapter.
Prior to operation, the electrical integrity of the transmission line, including all connectors, can be checked with a simple DC check between the center conductor and outer conductor. (This is neither possible, nor required for waveguide).
The transmission line should ideally be connected directly to the antenna at one end and to the *LYNX.sc* antenna port at the other end. However, short RG-214 type pigtail jumper cables may be required to avoid sharp bends in the transmission line to limit stress on either connection.

7/8 inch coax cable or larger is not recommended for use at 5.8 GHz and higher frequencies.

Do not use right angle N-type connectors with the 5.8 GHz LYNX.sc radios: they may present high loss at 5.8 GHz. Do not use a low quality N-type jumper cable with the LYNX.sc. Some cable types, such as RG-8, may have too high a loss at 5.8 GHz.

3.10 Antenna Installation & Alignment

Installer Caution: Antennas used for this device must be fix-mounted on permanent outdoor structures to provide 5 meters or more separation from all persons during device operation to comply with FCC RF exposure requirements. Installers should contact manufacturer for applicable gain and type restrictions to ensure compliance.

The antenna installation consists of mounting the antenna on the tower, building roof, or other location that provides line-of-sight path clearance to the far-end location. In general, antennas smaller than 2 feet diameter are not recommended for urban areas due to their wider beamwidths, which results in higher interference susceptibility. For 2.4 GHz *LYNX.sc* radios, a minimum of 4 foot (1.2m) diameter antennas, or larger, are recommended.

Antennas should be ordered with a suitable mounting kit specific to the site requirements. For example, specifying round or angle tower leg adapters, or a roof tripod as necessary.

If the antenna is to be mounted indoors, "looking" through a window, it is recommended that the antenna be placed approximately 12 inches away from the glass and within 10 degrees of a right angle to the glass. The glass should be lead-free or very low-lead content type and avoid any metallic glass coatings for best results.

The antenna must be very rigidly mounted, with adequate room for azimuth and elevation adjustment.

The antenna polarization must be the same at both ends of the link, either vertical or horizontal.

In general, antenna mountings require a support pipe to which upper and lower support brackets are attached with “U” bolts. The antenna and optional elevation and azimuth adjustment rods are then mounted onto the support brackets. The whole structure must be adequately grounded for lightning protection. The antenna system must always be installed according to the manufacturer’s instructions.

Unless special test equipment is available, two operating *LYNX.sc* terminals are required to align the antennas. Alternatively, a CW generator may be used to transmit a signal toward the end under alignment.

The antenna is coarse aligned using visual sighting and then fine aligned using the receive signal level (RSL) voltage of the *LYNX.sc*.

The RSL voltage reading can still be used to peak antennas even if the radios have not synchronized, however far-end RSL cannot be measured from the near-end terminal until radios are synchronized.

To coarse align the antenna, first set it for flat elevation (no up or down tilt) using a spirit level. Then point it at a heading marker obtained using a compass back-bearing from an adjacent location, (ideally, 100 feet or more away from the antenna).

If a heading marker cannot be set sufficiently far away (for example when on a city building roof or looking through a window) then a rough azimuth setting can be obtained by sighting along the antenna feed.

It should be verified that both antennas are on the same polarization by using the manufacturer's instructions. Otherwise the RSL will be approximately 25 to 30 dB below the calculated level.

Most antennas will also need fine alignment obtained using an operating link because it is very important to maximize the receive RF signal level at each end of the radio link.

Read Section 3.7 before applying DC power to the LYNX.sc radio.

Once the coarse alignment has been set-up at both ends, then the link can be powered and some level of reliable communication established. The voltage at the *LYNX.sc* front panel RSL test point should be measured with a DVM to determine the relative receive RF signal level.

For the fine alignment, adjusting first the azimuth and then the elevation of the local antenna will maximize the RSL voltage. Then, the far antenna is aligned in the same way, using the RSL voltage of its local *LYNX.sc* radio.

When aligning antennas it may be convenient to run two wires from the RSL and ground test points to the antenna so that the voltmeter reading is directly visible to the technicians aligning the antenna. Also, a cellular telephone or two-way radio may be useful for coordinating alignment activities between both ends of the link. Once the radios are coarse aligned and synchronized, the built-in orderwire phone service can also be used to coordinate alignment between both ends of the link.

An orderwire telephone will provide end-to-end voice communications once radios are synchronized. Synchronization usually can be accomplished by coarse alignment only. After synchronization, the orderwire phones can be used to communicate between radio sites for antenna fine alignment. The phone interconnect cable can be extended to the antenna when desired.

The larger the antenna size, the more critical alignment becomes: for example, with a 2 foot dish, the antenna can be moved ±3 degrees off the correct heading before the receive signal level drops by 3 dB. This compares with a 6-foot dish which may only be moved ±1 degree for the same degradation.

The graph shown in Figure 3-10 shows the typical variation of RSL voltage as the receive signal level is increased from threshold to a higher level. There is some variation between *LYNX.sc* receivers, but an approximate estimate of the potential RSL value may be made using this figure.

Use the Factory Test Data Sheet shipped with your LYNX.sc terminal to obtain the best estimate of your RSL.

Above 0 dBm RSL, the receiver may produce errors: however this level is rarely likely to be exceeded. A link budget calculation should be made to calculate the anticipated RSL as described in Section 3.3.3. During anomalous propagation conditions, the RSL may fade but will not increase up more than 10 dB (except in unusual very long paths which may fade up by 15 dB).

Antenna alignment should enable the RSL to be peaked to the level calculated in the link budget. If the RSL is peaked but is approximately 20 dB below the calculated level, then it is likely that the antennas are aligned on a sidelobe of the antenna's radiated signal. In this case, the antennas should be rotated in a wide arc until the main lobe is located. (Other possible causes of low RSL are path obstructions, loss in connectors, adapters and pigtail jumper cables or different antenna polarization at each end of the link.)

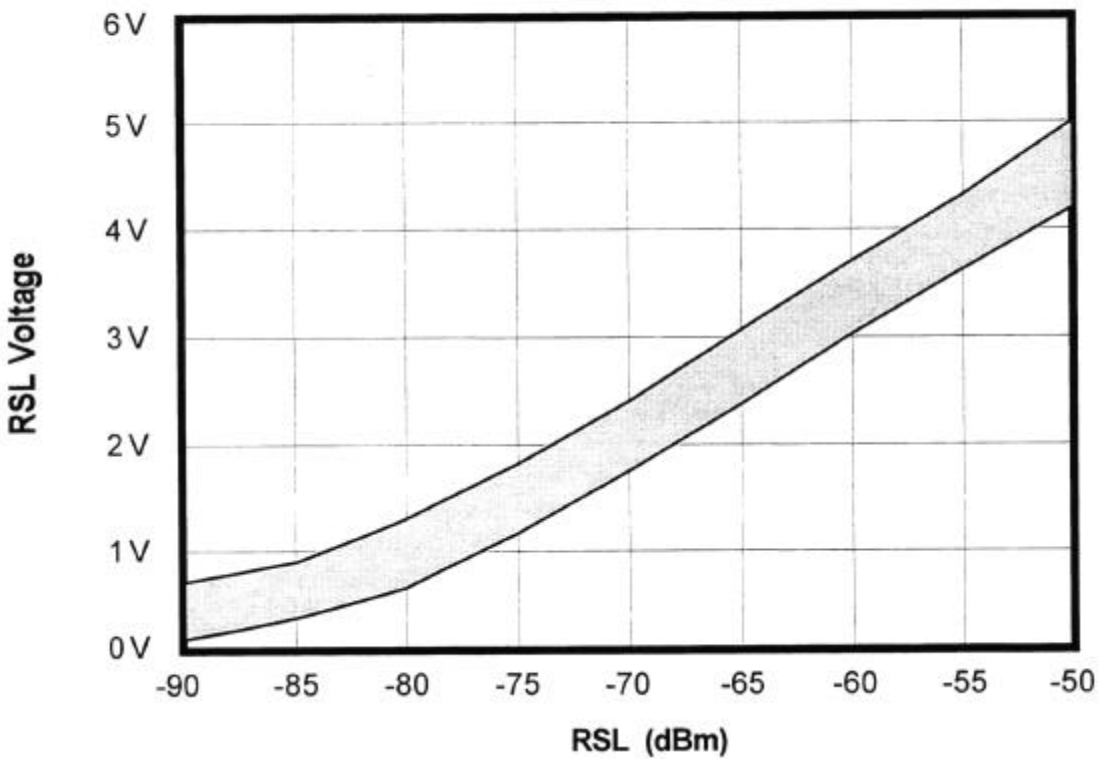

Figure 3-10: Typical RSL Voltage versus Received Signal Level (RSL)

3.11 CEPT-1 (E1) InterfaceConnection

The CEPT-1 interface connection to the *LYNX.sc* radio is on the rear panel.

Additional external lightning protection devices are recommended for the CEPT-1 connections if the radio is installed in an area prone to lightning.

The CEPT-1 connection to the *LYNX.sc* is at the data interface on the rear of the shelf. Individual BNC connectors are used to interface the line transmit and receive functions. Seventy-five (75) ohm co-axial cables with BNC fittings should be used to connect *LYNX.sc* to external equipment.

If a balanced 120 ohm connection (RJ45) is required, an optional balun will provide this interface. If you can not locate these baluns (balanced/unbalanced) devices, please consult the factory.

The DATA OUT port provides a bipolar signal (positive and negative pulses) referenced to ground, with the BNC shield connected to ground.

However, the DATA IN port accepts a similar bipolar signal with the BNC shield normally left OPEN (floating) in order to eliminate any ground loop problems. If desired, the BNC shield on the DATA IN port may be grounded using the selector switch SW2.

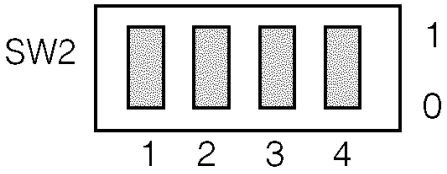

Position	Description	Setting
1	Grounding Condition Channel 1	0 = Floating 1 = Grounded
2	Grounding Condition Channel 2*	0 = Floating 1 = Grounded
3	Grounding Condition Channel 3*	0 = Floating 1 = Grounded
4	Grounding Condition Channel 4*	0 = Floating 1 = Grounded

* Where applicable

Figure 3-11: CEPT-1 Interface Grounding Switch

3.12 DIP Switch Settings

A quick reference guide to all DIP switches is provided in Appendix B.

DIP switch settings are noted by their position, either up (1), or down (0), not by on/off as may be printed on the DIP switch assembly.

3.12.1 Channel Selection

The *LYNX.sc* radio offers several frequencies of operation except for the 2.4 GHz 2xT1 and the 5.8 GHz 4xT1 models (see Section 3.5).There are DIP switch segments (typical numbers 5 through 8 on SW3) which define the frequency channel plan of the *LYNX.sc* radio (refer to Appendix B). The DIP switches must be set to match the filter assembly that is mounted on the radio. For single and double capacity models, positions 5,6 and 7 define the frequency channel plan of the radio (e.g. A, B, C), the last DIP switch defines the transmit channel of the radio (e.g. A1 or A2).
Radios are shipped from the factory with their DIP switch segments set to match the installed filter. In most cases, no modification of these switches is required.` Also, there are labels on the RF filter illustrating the correct DIP switch settings. One label is right side up and the other is upside down. Set the DIP switch settings for the label that is right side up. If a new filter is installed, or the existing filter is rotated for opposite channel configuration (e.g. A1 to A2), reset the DIP switches to match the right side up label on the filter. Refer to Section 4.2 for more information.
The radio channel selection is user adjustable by removing and replacing, or reversing the filter assembly. This allows units of the same radio model to be used as spares for several channels. For example, if a network of *LYNX.sc* radios has several radios using all three E1 channel plans at 5.8 GHz, a single spare unit of any channel plan can be used to spare all the radios. If a radio failure were to occur in the network, the filter assembly of the failed unit would be removed and replace the filter assembly in the spare radio. The DIP switch segments on the spare may need to change to match the installed filter and the spare radio could be put into service.

The DIP switch setting must match the filter assembly mounted on the radio. Also, both radios of a link must have opposite channel plans (e.g. A1 and A2).

Consult Section 4.2 of this manual for more information on changing RF channels. Consult Appendix B for proper frequency channel switch settings.

Other NON-standard frequency plans may be offered in the future. In these cases, follow the DIP switch setting on the filter label.

3.12.2 Loopback Test Signal Selection

The *LYNX.sc* radio allows loopback operation using an internally generated test signal or using an externally generated test signal. A single DIP switch segment on SW1 as shown in Figure 3-12, allows the operator to select the use of either the internal or an external test signal. The factory setting for loopback mode is internal.

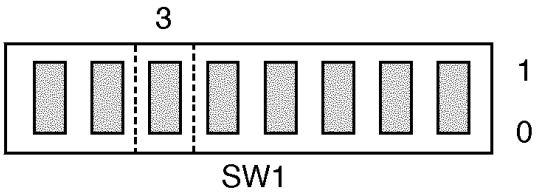

	3
External Test Signal	1
Internal Test Signal	0

Figure 3-12: Loopback Mode Selection

3.12.3 Spreading Code Selection

The spreading code is the pseudo-random chip sequence that is mixed with the data to produce the spread spectrum signal. The spreading code is generated by the *LYNX.sc* radio internally. Different codes can be selected using the DIP switches on the *LYNX.sc* radio rear panel.

*The spreading code **must** be the same for both ends of a radio link.*

The spreading code has no effect with the Model 31850 (4xE1) 3-channel LYNX.sc.

Spreading codes are all set in the factory to code 1. Should the code need to be changed, then both ends of the link must be changed.

Changing the spreading code is an out-of-service adjustment. There are two DIP switch segments on SW3 located on the rear panel which select the spreading codes. See Figure 3-13 for DIP switch segment settings.

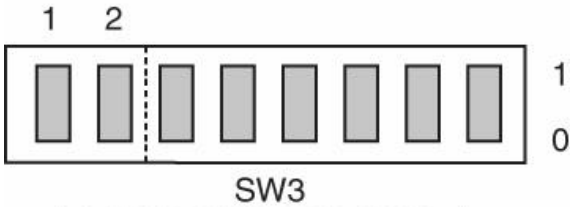

	1	2
Code 1	0	0
Code 2	0	1
Code 3	1	0
Code 4	1	1

Figure 3-13: Spreading Code Selection

3.12.4 Input Alarm (Data Loss) Enable/Disable

The *LYNX.sc* radio provides a capability to enable or disable input alarms (Data Loss). On the front panel and over the alarm and diagnostic interfaces, an alarm condition is normally generated if there is no input data signal (E1) to the radio. For example, in the case of the double E1 capacity model, the radio may have been installed in a location only requiring one E1 signal for traffic while the second E1 channel has been left idle (for future planned expansion). In this case, it may be desirable to disable the input alarm to the second channel so that local and remote alarms are not regularly generated by the (known) lack of this data input. When the network is later expanded to include traffic on the second E1, this switch can be set to enable the input data alarm condition. See Figure 3-14 for DIP switch segment settings for the 4xE1 model. Refer to appendix B for all models.

When a DATA LOSS alarm condition occurs, the LYNX.sc radio will inject AIS into the incoming data stream, even if the input alarm has been disabled.

1xE1 and 2xE1 Models:

On SW1, switch segment(s) 1 (and 2) apply to channels 1 and 2 respectively.

4xE1 Model:

On SW3, switch segment 3 applies to Channel 3 input while switch segment 4 applies to Channel 4 input.

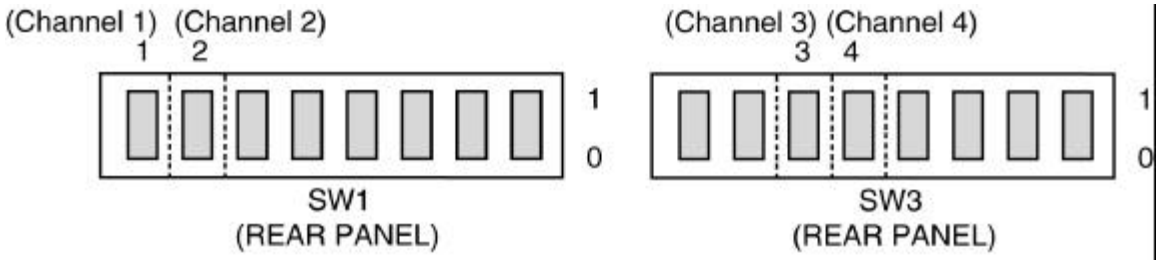

	1	2
Input Alarm Disabled	1	1
Input Alarm Enabled	0	0

	3	4
Input Alarm Disabled	1	1
Input Alarm Enabled	0	0

Figure 3-14: Input Alarm Disable Switch

3.12.5 AIS Enable/Disable

AIS (Alarm Indication Signal) is the blue code (all 1's) that keeps the digital line interface active under data loss conditions. AIS is required by certain equipment to maintain synchronization (for example, it is required on all leased line circuits). However, it is not required by all equipment (for example, a CSU/DSU will initiate its own blue code to the line under data loss conditions).

Under test conditions, when measuring receive threshold, for example, it may be necessary, to disable AIS to facilitate BER measurement.

There is a user selectable DIP switch segment on the rear panel of the *LYNX.sc* radio that includes selection of the AIS function (on/off) at the receiver line output. When the AIS is selected (on), the CEPT-1 signal will send blue code to the line when the received BER exceeds 1×10^{-3}. This function is similar to a data "mute" function. When the AIS is disabled (off), no insertion of data will take place unless an RX SYNC alarm condition occurs. Refer to Figure 3-15 for DIP switch segment information.

The standard factory setting is to have the demodulator AIS alarm selected ON because it prevents a severely errored signal (possibly unsynchronized) from being sent out to the line.

It is recommended that AIS be selected ON for normal operation.
It is recommended that AIS be selected OFF for measuring BER at threshold.

This DIP switch does not affect AIS injection into the transmitted data stream upon a DATA LOSS condition.

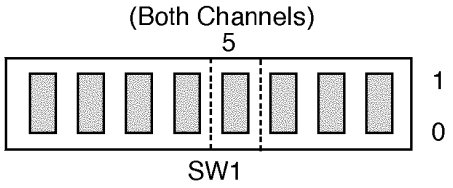

	5
Disable	1
Enable	0

Figure 3-15: AIS Switch

3.13 System Turn-up to Service

1. Prior to installing the system, it may be desirable to perform a back-to-back test of the *LYNX.sc* radio pair. Consult Section 4.9 for further details. Back-to-back testing is a simple way to verify that the *LYNX.sc* radios are fully operational before they are installed. Installation adds several variables (such as antenna alignment) which can lead to system turn-up delays. Also, during back-to-back testing, the DIP switch settings and some connections can be tested. This step can eliminate a majority of troubleshooting once the radios are installed.

A cellular phone or two-way radio system (walkie talkie, CB, mobile radio) can be very useful during installation. These can be used for temporary near-end and far-end communications between the installation personnel at one site and installation personnel at the other site while installing the system. These can also be helpful for communication between a person at the top of a very tall tower and ground personnel.

The LYNX.sc radio incorporates an internal Orderwire feature that provides end-to-end "telephone" style communications. However, the link must be partially operational to use this feature. In lieu of, or in addition to the use of cellular phones or two-way radio, this Orderwire feature can also be very useful for installation, but typically cannot be put into service until step 8 or 9 of this procedure is completed. See Section 3.14.1 for more details.

2. Perform a general alignment of the antennas on both ends of the path using binoculars, compass or other related tools. It is important to have the antennas aligned as accurately as possible before putting radio traffic over the link. This will help in getting the system running more rapidly. See Section 3.10 for more details.

3. Connect the transmission line to the antenna, and feed it to the *LYNX.sc* radio location (see Section 3.9). Connect the opposite end of the transmission line to the N-type female connector located on the filter assembly which occupies the top half of the *LYNX.sc* rear panel. The connection must be terminated into an antenna or a load before DC power is applied to the radio.

4. Verify that DIP switch settings for frequency channel selection match that of the filter that is installed on the rear of the radio. Consult 3.12.1 for further details. The far-end radio must have the same channel plan (e.g. A, B, C) as the near-end radio, and the opposite Tx and Rx frequencies (e.g. A1 and A2 make up a matched pair of radios).

5. Verify that the DIP switch settings for spreading code are the same for both ends of the radio link (see Section 3.12.3).

6. With the DC power source active, but not plugged into the *LYNX.sc* radio, using a voltmeter, confirm that the DC mating connector has the proper power connections in accordance with Section 3.7. Verify the polarity and the absolute voltage on all pins. Verify ground connection for power.

7. Connect power to the *LYNX.sc* radio. Verify that the Front Panel "ON" LED indication is illuminated. This confirms that power has been properly applied.

Ensure that the RF Antenna port connection is properly terminated before applying power to the LYNX.sc terminal, as in step 3.

When the LYNX.sc radio is initially powered-on, some alarm conditions may be present. This is normal and alarms can be ignored at this time.

8. Place a voltmeter across the GND and PWR front panel test points. See Figure 3-16 and 3-17 for voltage setting information and Table 3-C for typical output power levels for given cable lengths where EIRP limits apply. If necessary, use a small screwdriver at the front panel receptacle to adjust the output power of the local transmitter in accordance with the path analysis calculations. The recessed potentiometer is rotated clockwise to increase transmit output power and counter clockwise to decrease transmit output power. After verifying correct setting of the transmit output power, disconnect the voltmeter. Place the cover cap found in the installation accessory kit over the front panel receptacle.

The LYNX.sc radio requires professional installation. With some LYNX.sc models, in certain countries, there may be Effective Isotropic Radiated Power (EIRP) limits which dictate the maximum output power that the LYNX.sc radio can transmit given the transmission line loss and the gain of the antenna. Consult with appropriate government agencies or Western Multiplex if there is any question regarding maximum output power allowed.

In the USA, 5.8 GHz models may be operated at full power. 2.4 GHz models may require a power reduction of 1 dB from +30 dBm input power, as measured at the antenna feed, for every 3 dB that the antenna gain exceeds +6 dB. See Section 3.3.3 and Tables 3-C or 3-D for more details.

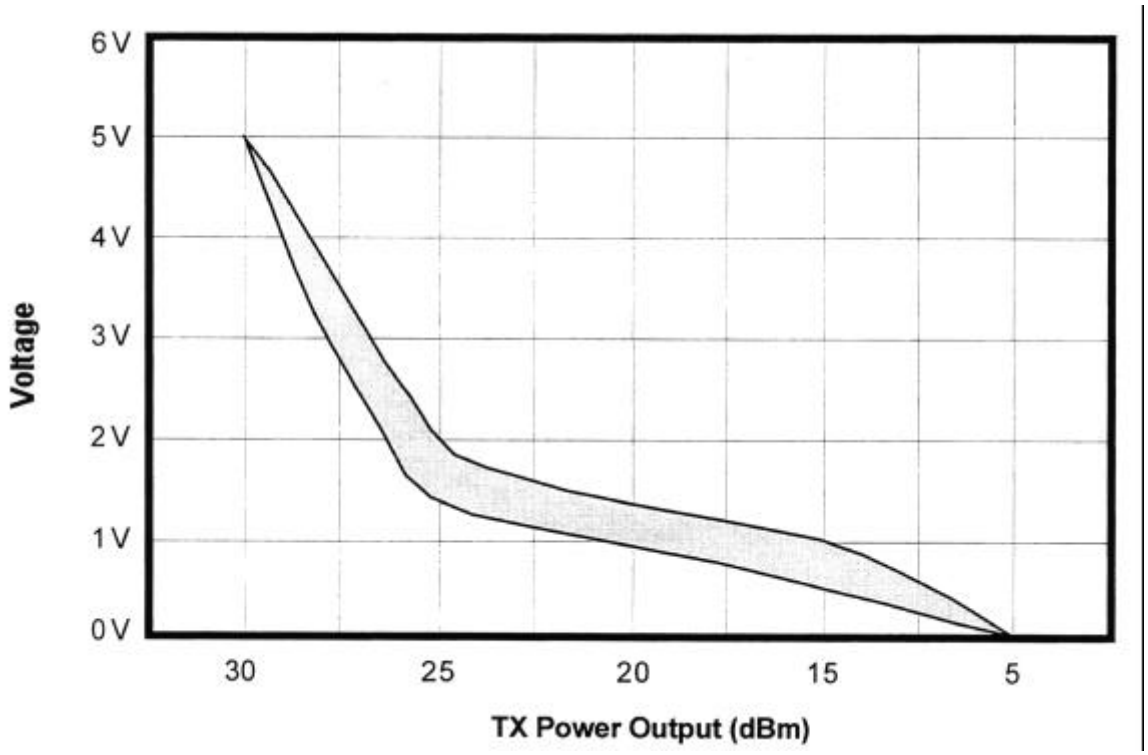

Figure 3-16: Typical RF Output Power versus PWR Voltage, 2.4 GHz Models

Use the LYNX.sc Factory Test Data sheet to determine more precisely the voltage corresponding to the RF output power.

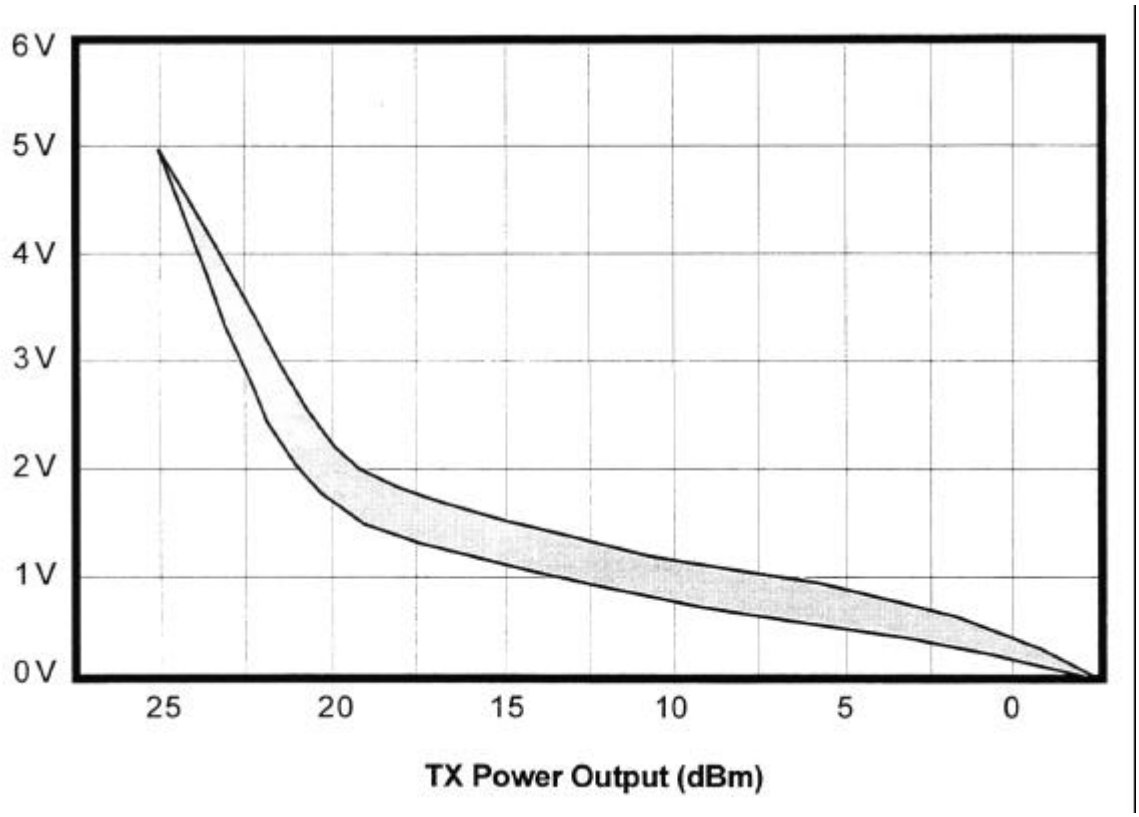

Figure 3-17: Typical RF Output Power versus PWR Voltage, 5.8 GHz Models

Use the LYNX.sc Factory Test Data sheet to determine more precisely the voltage corresponding to the RF output power.

For precision measurement of transmit output power, it is best to connect an RF power meter to the antenna port. The PWR port voltage may not provide enough precision. This is especially important where EIRP limits apply to the installation.

In cases of no EIRP limits, the radio transmitter output power can be adjusted to maximum for installation, except for very short paths using very high gain antennas, where excessive power may not be advised.

Don't forget that the RF output port should be terminated at all times when power is applied to the LYNX.sc radio. Therefore, disconnect power to the radio before connecting a power meter and reapply power once connected. Often, an RF power meter may have a limit to the input power that it can measure without damage. It is advised to place a calibrated fixed value RF attenuator (typically 20 dB or more) between the LYNX.sc radio and the power meter to assure proper operation and safety for the RF power meter. The value of this fixed attenuation can then be added to the value of the RF power meter reading to obtain the actual LYNX.sc radio transmitter output power.

9. Connect a voltmeter across the GND and RSL front panel test points. This voltage reading corresponds to the Received Signal Level (RSL) of the near-end radio. In other words, RSL is the "amount" of signal the near-end radio is receiving from the far-end radio. Since the antennas have not been finely aligned, it is not expected at this time that the RSL will read very high. However, at this point it can be verified that some communication is taking place between the two *LYNX.sc* terminals. Use the RSL voltage reading to align the antennas. Align one antenna at a time in accordance with Section 3.10. Complete alignment of both ends of the radio link before going further.

The RSL voltage output on the radio's front panel will output a voltage range over the full receiving capability of the radio (approximately 10 VDC at 0 dBm to 0.0 VDC at threshold).

The *LYNX.sc* radio has a unique feature of allowing measurement of the far-end RSL from the near-end radio. This is only possible if the *LYNX.sc* radios are communicating (the RSL is above threshold). The far-end RSL can be used to verify that adjustments to local antenna alignment are corresponding to the far-end radio reception. Far-end RSL is measured by pressing and holding the DISPLAY FAR END front panel button. While this button is held, the RSL voltage indicates the RSL of the far-end radio. RSL of both ends should be verified to be within approximately 2 dB of predicted value (see Section 3.3.3). There are several factors that can contribute to low RSL:

- Incorrect antenna alignment (aligned on a lobe and not on the main signal)
- Improper polarization alignment of antennas (horizontal vs. vertical)
- Transmission line problems (loose connections, bent or damaged cables, lossy adapters)
- Path obstructions (trees, buildings, hills, etc.)

- Path clearance (line-of-sight, earth curvature, Fresnel zone, diffraction and partial obstruction)
- Weather (inversion layers, ducting and multipath)
- Antenna feed (coaxial/connector) problem

The LYNX.sc radio requires professional installation. Don't forget that the transmitter output power adjustment on the LYNX.sc radio effects the RSL. Depending on EIRP limits (if any), path distance, and antenna gain, you may need to adjust the output transmit power to the proper level before putting the radios in service.

If radio synchronization has been established, the radio link may be able to provide some limited communications over the link. It can be helpful to establish voice communications from one end of the radio link to the other using the Orderwire feature of the LYNX.sc radio. See Section 3.14.1 for details.

If RSL is lower than anticipated, recheck the path clearance and transmission line as these are the typical causes of low RSL. Radio operations can be verified by connecting radios back-to-back with attenuators (40-60 dB), (see Section 4.9). If the problem remains, consult Section 4 of this manual for troubleshooting techniques which will help determine the source of the problem.

10. Once RSL is verified to be near the predicted value, the radio link is ready for data. You may verify error-free operation by using the loopback function, as described in Section 3.13.2 or BER testing, as described in Section 4.10. If the link is not error-free, see Section 4.7 for troubleshooting guidelines.

11. Once radio performance is verified and acceptable, with loopback mode turned off (press the ENABLE button, the LED will turn off), the *LYNX.sc* radios can now be put into service with the intended E1 traffic. Connect the E1 signal to the CEPT-1 Interface BNC connector. Refer to Section 3.11 for configurations of these connections. With E1 traffic applied in both directions, all front panel LEDs, except for POWER and any unused E1 ports, will be off. If LEDs are lit, consult Section 4 of this manual.

12. Now that the link is operational, other services can be connected including Orderwire, Diagnostics, Alarms and Aux Data (Service Channel). Consult Section 3.14 for details on these connections.

		TRANSMITTER POWER (dBm)													
Feeder Length Meters	Feeder Length Feet	2.4 GHz, 1/2" Coax			2.4 GHz, 7/8" Coax			5.8 GHz, 1/2" Coax				5.8 GHz, EW52 Waveguide			
		4' Dish	6' Dish	8' Dish	4' Dish	6' Dish	8' Dish	2' Dish	4' Dish	6' Dish	8' Dish	2' Dish	4' Dish	6' Dish	8' Dish
3.0	**10**	9.4	4.9	3.4	9.2	4.7	3.2	7.7	1.7	-1.3	-4.3	7.1	1.1	-1.9	-4.9
6.1	**20**	9.8	5.3	3.8	9.4	4.9	3.4	8.3	2.3	-0.7	-3.7	7.3	1.3	-1.7	-4.7
9.1	**30**	10.1	5.6	4.1	9.7	5.2	3.7	9.0	3.0	0.0	-3.0	7.4	1.4	-1.6	-4.6
12.2	**40**	10.5	6.0	4.5	9.9	5.4	3.9	9.6	3.6	0.6	-2.4	7.5	1.5	-1.5	-4.5
15.2	**50**	10.9	6.4	4.9	10.1	5.6	4.1	10.3	4.3	1.3	-1.7	7.7	1.7	-1.3	-4.3
18.3	**60**	11.3	6.8	5.3	10.3	5.8	4.3	11.0	5.0	2.0	-1.0	7.8	1.8	-1.2	-4.2
21.3	**70**	11.7	7.2	5.7	10.5	6.0	4.5	11.6	5.6	2.6	-0.4	7.9	1.9	-1.1	-4.1
24.4	**80**	12.0	7.5	6.0	10.8	6.3	4.8	12.3	6.3	3.3	0.3	8.0	2.0	-1.0	-4.0
27.4	**90**	12.4	7.9	6.4	11.0	6.5	5.0	12.9	6.9	3.9	0.9	8.2	2.2	-0.8	-3.8
30.5	**100**	12.8	8.3	6.8	11.2	6.7	5.2	13.6	7.6	4.6	1.6	8.3	2.3	-0.7	-3.7
33.5	**110**	13.2	8.7	7.2	11.4	6.9	5.4	14.3	8.3	5.3	2.3	8.4	2.4	-0.6	-3.6
36.6	**120**	13.6	9.1	7.6	11.6	7.1	5.6	14.9	8.9	5.9	2.9	8.6	2.6	-0.4	-3.4
39.6	**130**	13.9	9.4	7.9	11.9	7.4	5.9	15.6	9.6	6.6	3.6	8.7	2.7	-0.3	-3.3
42.7	**140**	14.3	9.8	8.3	12.1	7.6	6.1	16.2	10.2	7.2	4.2	8.8	2.8	-0.2	-3.2
45.7	**150**	14.7	10.2	8.7	12.3	7.8	6.3	16.9	10.9	7.9	4.9	9.0	3.0	0.0	-3.0
48.8	**160**	15.1	10.6	9.1	12.5	8.0	6.5	17.6	11.6	8.6	5.6	9.1	3.1	0.1	-2.9
51.8	**170**	15.5	11.0	9.5	12.7	8.2	6.7	18.2	12.2	9.2	6.2	9.2	3.2	0.2	-2.8
54.9	**180**	15.8	11.3	9.8	13.0	8.5	7.0	18.9	12.9	9.9	6.9	9.3	3.3	0.3	-2.7
57.9	**190**	16.2	11.7	10.2	13.2	8.7	7.2	19.5	13.5	10.5	7.5	9.5	3.5	0.5	-2.5
61.0	**200**	16.6	12.1	10.6	13.4	8.9	7.4	20.2	14.2	11.2	8.2	9.6	3.6	0.6	-2.4
64.0	**210**	17.0	12.5	11.0	13.6	9.1	7.6	20.9	14.9	11.9	8.9	9.7	3.7	0.7	-2.3
67.1	**220**	17.4	12.9	11.4	13.8	9.3	7.8	21.5	15.5	12.5	9.5	9.9	3.9	0.9	-2.1
70.1	**230**	17.7	13.2	11.7	14.1	9.6	8.1	22.2	16.2	13.2	10.2	10.0	4.0	1.0	-2.0
73.2	**240**	18.1	13.6	12.1	14.3	9.8	8.3	22.8	16.8	13.8	10.8	10.1	4.1	1.1	-1.9
76.2	**250**	18.5	14.0	12.5	14.5	10.0	8.5	MAX	17.5	14.5	11.5	10.3	4.3	1.3	-1.7
79.2	**260**	18.9	14.4	12.9	14.7	10.2	8.7	MAX	18.2	15.2	12.2	10.4	4.4	1.4	-1.6
82.3	**270**	19.3	14.8	13.3	14.9	10.4	8.9	MAX	18.8	15.8	12.8	10.5	4.5	1.5	-1.5
85.3	**280**	19.6	15.1	13.6	15.2	10.7	9.2	MAX	19.5	16.5	13.5	10.6	4.6	1.6	-1.4
88.4	**290**	20.0	15.5	14.0	15.4	10.9	9.4	MAX	20.1	17.1	14.1	10.8	4.8	1.8	-1.2
91.4	**300**	20.4	15.9	14.4	15.6	11.1	9.6	MAX	20.8	17.8	14.8	10.9	4.9	1.9	-1.1
94.5	**310**	20.8	16.3	14.8	15.8	11.3	9.8	MAX	21.5	18.5	15.5	11.0	5.0	2.0	-1.0
97.5	**320**	21.2	16.7	15.2	16.0	11.5	10.0	MAX	22.1	19.1	16.1	11.2	5.2	2.2	-0.8
100.6	**330**	21.5	17.0	15.5	16.3	11.8	10.3	MAX	22.8	19.8	16.8	11.3	5.3	2.3	-0.7
103.6	**340**	21.9	17.4	15.9	16.5	12.0	10.5	MAX	MAX	20.4	17.4	11.4	5.4	2.4	-0.6
106.7	**350**	22.3	17.8	16.3	16.7	12.2	10.7	MAX	MAX	21.1	18.1	11.6	5.6	2.6	-0.4
109.7	**360**	22.7	18.2	16.7	16.9	12.4	10.9	MAX	MAX	21.8	18.8	11.7	5.7	2.7	-0.3
112.8	**370**	23.1	18.6	17.1	17.1	12.6	11.1	MAX	MAX	22.4	19.4	11.8	5.8	2.8	-0.2
115.8	**380**	23.4	18.9	17.4	17.4	12.9	11.4	MAX	MAX	MAX	20.1	11.9	5.9	2.9	-0.1
118.9	**390**	23.8	19.3	17.8	17.6	13.1	11.6	MAX	MAX	MAX	20.7	12.1	6.1	3.1	0.1
121.9	**400**	24.2	19.7	18.2	17.8	13.3	11.8	MAX	MAX	MAX	21.4	12.2	6.2	3.2	0.2

Table 3-C: Transmitter Output Power Adjustment, +6 dBW EIRP Installations
(Such as Canada)

Feeder Length Meters	Feeder Length Feet	TRANSMITTER POWER (dBm)					
		2.4 GHz, 1/2" Coax			2.4 GHz, 7/8" Coax		
		4' Dish	6' Dish	8' Dish	4' Dish	6' Dish	8' Dish
3.0	10	23.4	22.0	21.2	23.2	21.9	21.1
6.1	20	23.8	22.4	21.6	23.5	22.1	21.3
9.1	30	24.1	22.8	22.0	23.7	22.4	21.5
12.2	40	24.5	23.2	22.4	23.9	22.6	21.8
15.2	50	24.9	23.6	22.7	24.2	22.8	22.0
18.3	60	25.3	23.9	23.1	24.4	23.0	22.2
21.3	70	25.7	24.3	23.5	24.6	23.3	22.4
24.4	80	26.0	24.7	23.9	24.8	23.5	22.7
27.4	90	26.4	25.1	24.3	25.1	23.7	22.9
30.5	100	26.8	25.5	24.6	25.3	24.0	23.1
33.5	110	27.2	25.8	25.0	25.5	24.2	23.4
36.6	120	27.6	26.2	25.4	25.8	24.4	23.6
39.6	130	27.9	26.6	25.8	26.0	24.7	23.8
42.7	140	28.3	27.0	26.2	26.2	24.9	24.1
45.7	150	28.7	27.4	26.5	26.5	25.1	24.3
48.8	160	29.1	27.7	26.9	26.7	25.3	24.5
51.8	170	29.5	28.1	27.3	26.9	25.6	24.7
54.9	180	29.8	28.5	27.7	27.1	25.8	25.0
57.9	190	MAX	28.9	28.1	27.4	26.0	25.2
61.0	200	MAX	29.3	28.4	27.6	26.3	25.4
64.0	210	MAX	29.6	28.8	27.8	26.5	25.7
67.1	220	MAX	MAX	29.2	28.1	26.7	25.9
70.1	230	MAX	MAX	29.6	28.3	27.0	26.1
73.2	240	MAX	MAX	MAX	28.5	27.2	26.4
76.2	250	MAX	MAX	MAX	28.8	27.4	26.6
79.2	260	MAX	MAX	MAX	29.0	27.6	26.8
82.3	270	MAX	MAX	MAX	29.2	27.9	27.0
85.3	280	MAX	MAX	MAX	29.4	28.1	27.3
88.4	290	MAX	MAX	MAX	29.7	28.3	27.5
91.4	300	MAX	MAX	MAX	29.9	28.6	27.7
94.5	310	MAX	MAX	MAX	MAX	28.8	28.0
97.5	320	MAX	MAX	MAX	MAX	29.0	28.2
100.6	330	MAX	MAX	MAX	MAX	29.3	28.4
103.6	340	MAX	MAX	MAX	MAX	29.5	28.7
106.7	350	MAX	MAX	MAX	MAX	29.7	28.9
109.7	360	MAX	MAX	MAX	MAX	29.9	29.1
112.8	370	MAX	MAX	MAX	MAX	MAX	29.3
115.8	380	MAX	MAX	MAX	MAX	MAX	29.6
118.9	390	MAX	MAX	MAX	MAX	MAX	29.8
121.9	400	MAX	MAX	MAX	MAX	MAX	30.0

Table 3-D: Transmitter Output Power Adjustment for 2.4 GHz, USA Installations

3.13.1 Output Power Adjustment

The *LYNX.sc* radio requires professional installation. In certain cases, it is necessary to adjust the output power from the factory setting, for example:

- to meet EIRP (effective isotropic radiated power) limits, such as +6 dBW in Canada.
- to meet transmitter output limits in the 2.4 GHz band for USA installations.
- to avoid exceeding the maximum far-end RSL of 0 dBm.
- to coordinate a hub or repeater location.

To ensure maximum protection of the radio circuits, always ensure the antenna connector is terminated when power is applied.

For precise measurement of transmitter power, a calibrated RF power meter (such as the HP 435B with Power Sensor HP8481) is recommended. This power sensor can be connected directly to the output of the radio without exceeding the power rating. With some power meters, it may be necessary to place a calibrated in-line fixed attenuator between the radio antenna port and the power meter so as to not exceed the power meter's maximum input level. Thruline power meters do not operate at *LYNX.sc* RF frequencies.

If adjusting the output power to meet an EIRP limit, it will be first necessary to calculate the overall system gains and losses, including feeder losses for the type of transmission line installed and the antenna gain. Also refer to Table 3-C or 3-D for transmitter output power settings where installed with various transmission line lengths and antenna sizes. You may determine the radio transmit power for EIRP limited installations by the following equation:

Tx Power (dBm) = EIRP Limit(dBm) + Feeder Loss(dB) - Antenna Gain(dB)

In the USA, 2.4 GHz models have an output limit which is determined by:

Tx Power (dBm) = 30 - [(Antenna Gain - 6)/ 3] + Feeder Loss

Output power may be adjusted using a small screwdriver and rotating the potentiometer which is recessed behind the front panel. Clockwise rotation increases output power while counter-clockwise rotation decreases output power.

In lieu of a calibrated RF power meter, the PWR test port voltage can be used to estimate the output power. Figures 3-16 & 3-17 illustrate the voltage reading for various output power levels. The factory test data sheet should be used to establish a more precise setting of this adjustment.

After setting the correct output power, place the cover cap found in the installation accessory kit over the front panel receptacle.

3.13.2 Loopback/BER Testing

When a pair of *LYNX.sc* radios are installed and communicating with each other, a loopback or BER test can be performed to evaluate the link performance.

The *LYNX.sc* uses an internal test signal for loopback. Alternatively, an external test signal can be injected, as described in Section 3.12.4. Any E1 test pattern may be used to make measurements at one end of the link, provided the test sequence contains adequate 1's density, which is no more than 15 consecutive zeros.

A 2^{15}-1, QRSS or 3 in 24 test may be used. However a 2^{23}-1 test will violate the 1's density requirement.

To loop around the far-end radio, press ENABLE and hold for approximately 3 seconds. then release the Loopback ENABLE button on the front panel of the near-end radio. The ENABLE LED should now be blinking.

If the ENABLE loopback button LED is illuminated and not blinking, this means the far-end radio has initiated loopback (either manually or through the DIAGNOSTICS port).

When loopback is enabled using the internal test signal, the ERROR LED should not illuminate if the path is operating error-free. If the ERROR LED illuminates, this means that at least one bit error has occurred.

The DATA LOSS LED will illuminate if the external test signal mode has been selected (see Section 3.12.4) and there is no external test signal present at any of the CEPT-1 ports. When using external test mode and an external test signal, the ERROR LED function does not apply. In external test mode the ERROR LED will not illuminate, even when errors are present.

An external BER test set is required for statistical BER analysis. Disconnect all external CEPT-1 signals and connect the BER test set to the input and output BNC connectors. Select external test mode (see Section 3.12.2) and initiate loopback using the ENABLE loopback button. Now the BER test can be initiated. Section 4.10 describes BER testing in more detail.

Loopback may be turned off at either end of the link by simply pressing the ENABLE button at either end.

If two BER test sets are used to measure the link performance (one at each end) separately in each direction, frame slips will occur unless the BER test sets are synchronized with one test set as the master and the other as the slave.

For multiple capacity radio models, repeat all operations for the other channels if desired.

For multiple capacity radio models, only one loopback channel may be used at any one time. Loopback cannot be performed on more than one channel.

3.13.3 Error LED Mode Selection

The ERROR LED illuminates if any errors are present in the data stream during loopback. This LED is only functional when using the internal test signal.

The default mode for this LED is “latched.” That is, when a single error occurs, the LED illuminates and stays lit until loopback is turned off. This mode is especially useful for long term (overnight) testing, or any time that an operator is not watching the radio during loopback testing.

There is an optional mode for this LED which is “unlatched.” This allows the user to “view” the error rate. In this mode, the LED will flash on each time a single or multiple error occurs. The LED turns off if no further errors occur. This mode can be useful if a BER test set is not available and the user wishes to determine the nature of any error conditions (bursting, dribbling, occasional).

In “unlatched” mode, when any errors occur, the ERROR LED will illuminate for a minimum of one second. If errors continue within this one second interval, the LED will remain on until there are no errors for 1 second.

The two modes for this LED are selected by a rear panel DIP switch, as shown in Figure 3-18.

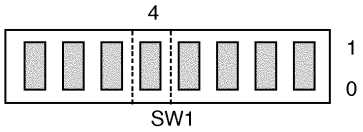

	4
LED Unlatched	1
LED Latched	0

Figure 3-18: Error LED Mode Selection

In the LED unlatch mode, after 100 errors the ERROR LED will remain lit to indicate excessive errors.

3.14 Additional Connections

There are additional customer connections which are optional and are **not required** to make the *LYNX.sc* operational but may prove useful.

3.14.1 Orderwire Connection and Address Selection

Orderwire is a “telephone” type wayside service which allows users of the *LYNX.sc* radio to establish voice communications from one radio to another, either directly to the companion far-end, or through a repeater configuration, or several repeater configurations.

Telephone connection specifications:

REN (Ringer Equivalency Number)	1.0 B
DTMF tones	within ±1.5% of nominal freq.
Ringing Voltage	48 VDC, typical

(Ringing voltage is adequate for modern solid state ringers, NOT for the older mechanical type ringers)

This Orderwire service does not affect the normal radio transmission of E1 traffic. Refer to Section 2.3.5 for the telephone specifications. For simple near-end to far-end communications, follow the steps below:

1. Using a small screwdriver, set the address of both terminals by rotating the address rotary selection switches on the rear panel of the *LYNX.sc* radio. The address is a two digit number (from 01 to 99). Each *LYNX.sc* terminal in the network should have a unique address. This address acts like a “phone number” for other users to call a particular terminal. Each *LYNX.sc* terminal should have a unique address.

Radio pairs (links) are shipped from the factory with addresses set to 01 or 02. Therefore, if only one pair is being used, address selection may not be necessary. Also, in a connected spur network, it may be desirable to maintain orderwire telephone addresses between 01 and 08 because the address doubles as the NMS/TBOS net address which is limited to the addresses 01 through 08 (see Section 3.14.3 for more information).

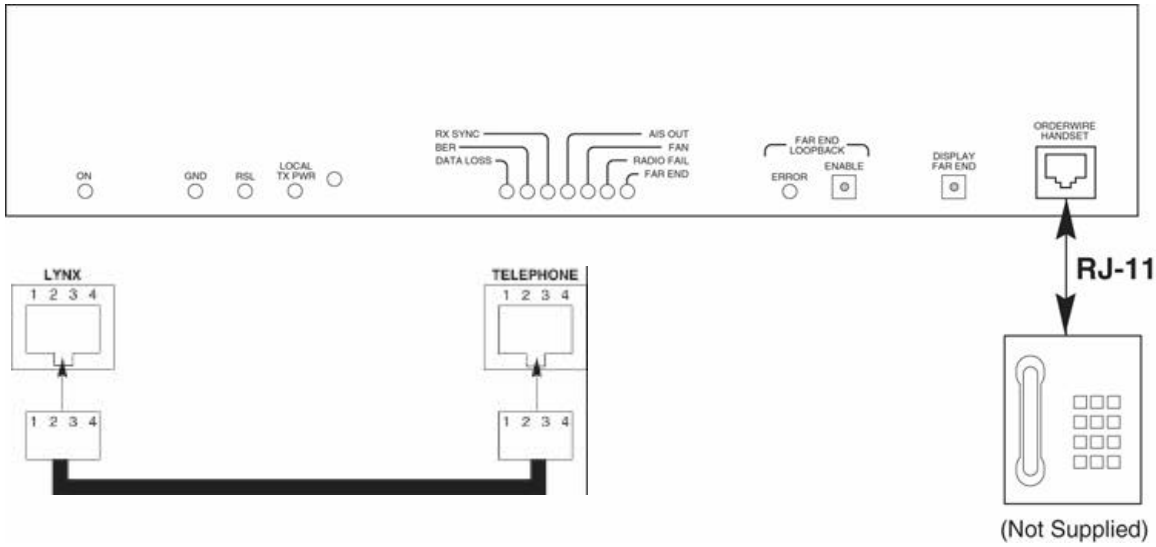

Figure 3-19: RJ-11 Orderwire Telephone Connection

2. Using a standard RJ-11 telephone cable, connect a standard electronic telephone (a touch tone phone, complete with dialer; a handset by itself will not work) to the Orderwire connector on the *LYNX.sc* front panel. This connector is wired identically to a standard two-wire telephone jack, see Figure 3-19 for details.

3. With a telephone connected to each *LYNX.sc* terminal on opposite ends of the link, either telephone can be used to “dial-up” the far-end location. Simply pick up the handset of the near-end telephone and dial the two-digit address of the far-end *LYNX.sc* terminal. The far-end terminal’s internal ringer and the connected telephone will ring, and if answered, two-way full-duplex voice communication is established.

If using the Orderwire or Network management functions, all LYNX.sc radios connected must have unique address settings (telephone numbers).

The orderwire address is set by two rotary switches on the rear panel of the LYNX.sc radio*. Use as small screwdriver to select the orderwire address (01 through 99).*

4. If the *LYNX.sc* radios are connected in a repeater configuration, Orderwire services can be established to all *LYNX.sc* terminals in the network by implementing a connection of their rear-panel connectors between repeater terminals. At the repeater site, a cable can be connected to the two *LYNX.sc* terminals between their rear panel VF 25-pin connectors as shown in Figure 3-20. With this cable in place, the Orderwire function will operate at terminals at each end of the repeater and at the repeater site. This function can be continued through several repeater sites if desired. For hub connections of 3 or more *LYNX.sc* radios at the same site, an external 4-wire bridge is required to connect all radios to the orderwire.

The orderwire system can be integrated with orderwire equipment supported by many other vendors. If your existing orderwire network uses 2 digit addressing, and 0 dBm VF interface, it can be connected to a LYNX.sc as shown in Figure 3-20.

Dialing a ∗ (star key) on the orderwire telephone implements an "all call" feature which rings all connected radios. Also, if a phone anywhere in the connected network has accidentally been left off-hook, the # (pound key) key can be used to mute all off-hook handsets until they are placed on and off hook again.

The orderwire operates like a "party line". All telephones provide communication to all other telephones in the connected network. Even if a particular telephone does not ring, it can still be used to talk and listen to any ongoing orderwire activity if the orderwire is in use at other terminal locations.

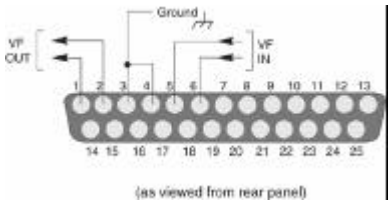

VF Connector

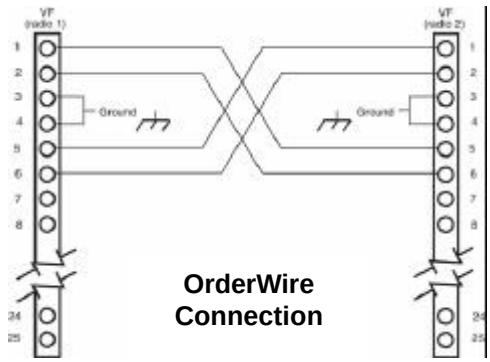

OrderWire Connection

Figure 3-20: VF Port Connection

3.14.2 Alarm Connections

External alarm outputs are provided at the 25-pin, D-type subminiature ALARM connector. There are two Form C summary alarm relays capable of switching 30 VDC at 1 A. Also, individual alarm logic outputs capable of sourcing and sinking 1mA are provided. These individual alarms interface to a single standard TTL load. When the unit is IN ALARM = “0”, the TTL output is 0 V to ±0.5 V. When the unit is NO ALARM = “1”, the TTL output is +3.5 V to +5.5 V. See Table 3-E and Figure 3-21 for Alarm Connections.

The “summary” alarm (Form C relay) is activated by any near-end front panel LED alarm condition, including if the loopback mode is enabled.

The “out-of-service summary” alarm (Form C relay) is activated by any of the following alarm conditions:

- RX SYNC
- Radio Fail
- Loopback Enabled

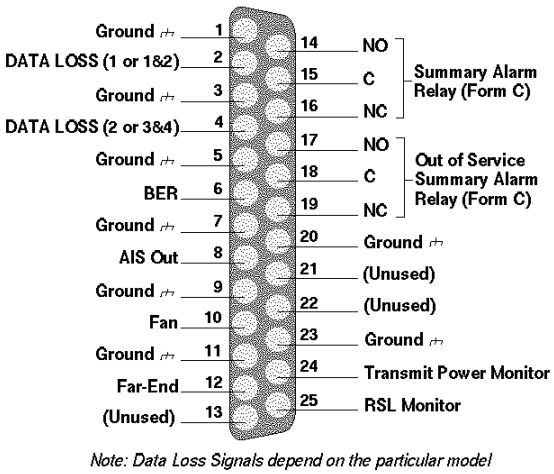

Figure 3-21: Pin Connections, ALARM Interface

PIN 2	**DATA LOSS (1 or 1&2)** - in alarm if no incoming data is received into the transmitter for channel 1 (for the 4xE1 model, includes channel 2). Data Loss is activated when the input signal drops below 0.97 volts for 175 bit intervals and is deactivated as soon as the input signal level rises above 0.97 volts. Radio transmits AIS to the far-end if in alarm. This alarm may be disabled by DIP switch selection (see Section 3.12.4).	**PIN 16**	**NC, SUMMARY ALARM, FORM C -** normally closed connection on summary alarm relay.
PIN 4	**DATA LOSS (2 or 3&4) –** use essentially the same description as Data Loss (1 or 1&2), for channel 2 (for the 4xE1 model, channels 3&4).	**PIN 17**	**NO, OUT OF SERVICE SUMMARY ALARM, FORM C -** normally open connection on out-of-service summary alarm relay. Closed when in alarm.
PIN 6	**BER -** in alarm when the received signal is degraded to an error rate above radio threshold (approximately 1 x 10^{-6})	**PIN 18**	**C, OUT OF SERVICE SUMMARY ALARM, FORM C -** common connection for the out-of-service summary alarm relay.
PIN 8	**AIS OUT -** in alarm when the BER exceeds 1 x 10^{-3} for the received signal, or when there is an RX SYNC alarm condition. Near-end radio CEPT-1 line output has AIS when in alarm. This alarm may be disabled as described in Section 3.12.5.	**PIN 19**	**NC, OUT OF SERVICE SUMMARY ALARM, FORM C -** normally closed connection on out-of-service summary alarm relay. Open when in alarm.
PIN 10	**FAN -** in alarm when one or both of the internal fans are not operative.	**PIN 21**	**NOT USED**
PIN 12	**FAR-END -** in alarm when the far-end radio has an alarm condition.	**PIN 22**	**NOT USED**
PIN 14	**NO, SUMMARY ALARM, FORM C -** normally open connection on summary alarm relay. Closed when in alarm.	**PIN 24**	**TX PWR MON -** voltage equal to the TX PWR front panel voltage.
PIN 15	**C, SUMMARY ALARM, FORM C -** common connection on the summary alarm relay.	**PIN 25**	**RSL MON -** voltage equal to the RSL front panel voltage. Equals far-end RSL if DISPLAY FAR END button is pressed and held.
PINS 1, 3, 5, 7, 9, 11, 20, & 23	**GROUND, CHASSIS CONNECTION**		

Table 3-E: Alarm Interface Connections

All alarms are active for a minimum of one second, or as long as the alarm condition persists, which ever is longer.
TTL signals are "in alarm" when there is a TTL zero condition (0 V to ± 0.5 V).

3.14.3 Diagnostics Port Operation

The Diagnostics Port is used to retrieve diagnostic or network management information about the *LYNX.sc* radios by means of a computer connection. This can be accomplished locally or remotely. Remote diagnostic port connections require either a modem (not included) connection be made to the serial port, when a local dial-up phone line is available at a radio site, or by means of direct connection through the AUX DATA port (Service Channel). The use of the AUX DATA channel can provide a “network management” port where serial interface data is available from all *LYNX.sc* radios in a network, provided that they are configured properly for this type of operation. (This section and Section 3.14.4 describe this further).

The diagnostics port allows connection of either EIA standard RS-232 or RS-422 devices to poll and receive status of the *LYNX.sc* radio. This serial port provides similar information to that which is normally available to a local operator by means of visual alarms and status (front panel LEDs, ADDRESS, DIP switch settings etc.), including voltage level measurements (such as RSL, PWR) and alarm port (see Section 3.14.2) status. The diagnostics port can also provide extended information including some advanced diagnostics and configuration information. Any information that is available on the far-end terminal is also available at the near-end Diagnostics port (such as far-end RSL, far-end alarms) by means of bridging the AUX DATA port (as described in Section 3.14.4). A DIP switch is used to define the command protocol for this port as shown in Figure 3-22. The default setting is for TBOS commands (as described later in this section). The other setting is for factory use only.

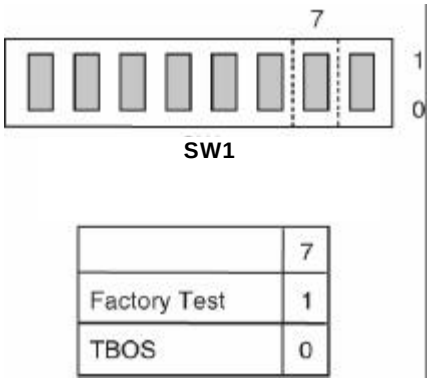

Figure 3-22: Diagnostic Port Protocol Selection

3.14.3.1 Diagnostics Port using RS-232

For RS-232 diagnostics connection to the *LYNX.sc* radio, connect the serial device (modem, computer, terminal) to the male 9-pin subminiature connector in accordance with Figure 3-23.

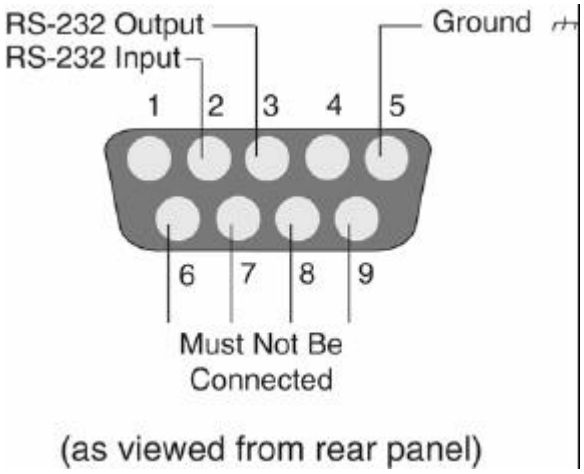

Figure 3-23: RS-232 Diagnostic Port Connections

Pins 6 through 9 must not be connected for RS-232 communications to operate properly.

3.14.3.2 Diagnostics Port using RS-422

For RS-422 Diagnostics connection to the *LYNX.sc* radio, connect to the serial device (modem, computer, terminal) to the male 9-pin subminiature connector in accordance with Figure 3-24.

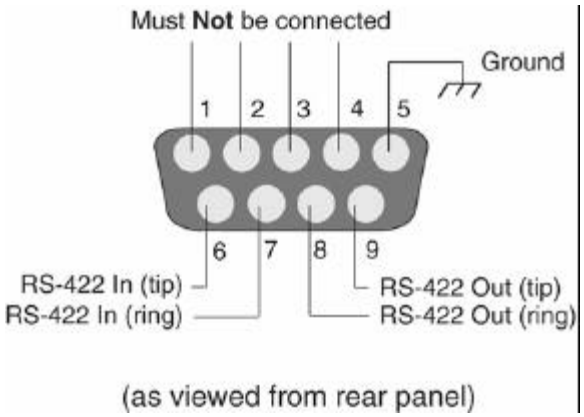

Figure 3-24: RS-422 Diagnostic Port Connections

Do not connect devices to both the RS-232 and RS-422 connections of the Diagnostics Port. This will cause data conflicts that will result in errors over the interface.

3.14.3.3 TBOS Protocol and Map

The diagnostics port is configured for an open industry standard protocol, called Telemetry Byte Oriented Serial (TBOS). TBOS is a poll and response protocol that operates on a RS-422 4-wire interface, one pair for transmit data (requests) to the radio, and one pair for receive data (responses) from the radio. TBOS is asynchronous, serial, half duplex transmissions of ASCII words which consist of one start bit, 8 data bits, odd parity and two stop bits at 1200 baud. The connected terminal (remote or local) can poll the radio and determine status of the connected *LYNX.sc* radio. The *LYNX.sc* is also able to communicate TBOS commands over the RS-232 connections, instead of the RS-422 connections if desired.

TBOS operates with a bit-map structure where each bit that the connected *LYNX.sc* radio sends to the TBOS terminal has a specific meaning with regard to status, alarms or controls. All TBOS network elements require a map for the network management software to interpret their responses to queries from the terminal. Table 3-F provides the TBOS map for the E1 *LYNX.sc* radios.

The near-end RSL and Tx power test point voltages are encoded as 8 bit words that can be converted into reference voltages (the same as at the front panel of the radio.

The address of the radio (see Section 3.14.1) serves as the “display” page number for the TBOS data. Since TBOS is limited to eight (8) displays of data, it is required that addresses of 01 through 08 be used for *LYNX.sc* radios in TBOS networks. Any radio with addresses other than 01 through 08 will not report to the TBOS bit-map. In order to view status displays of far-end radios, or other radios in the connected network, the AUX DATA port must be in Bridge (default) mode as described in Section 3.14.4.

Alarm points within the TBOS map behave like the radio front and rear panel alarms. If DIP switches have been set to disable alarms, the alarms are disabled within the TBOS map.

Byte	Point	Bit	Type*	Scan Point Definition	Control Point Definition	Notes
1	1	7	S	Model ID MSB		0011 = 2.4 GHz E1 (Model 31500)
	2	6	S	Model ID LSB+2		0100 = 5.8 GHz E1 (Model 31400)
	3	5	S	Model ID LSB+1		0101 = 5.8 GHz 2xE1 (Model 31700)
	4	4	S	Model ID LSB		1100 = 5.8 GHz 4xE1 (Model 31850)
	5	3	N/A	Future Use		
	6	2	S	Channel Plan ID MSB		SW3 pos 6 00=A, 01=B, 10=C
	7	1	S	Channel Plan ID LSB		SW3 pos 7 Defaulted to 00 (A) for Model 31800
	8	0	S	Channel Plan Tx High/Low		SW3 pos 8 (1 = Tx High, i.e. A2, B2, C2)
2	9	7	A	Radio Fail Alarm		Equal to F/P alarm
	10	6	A	AIS Out Alarm		Equal to F/P alarm
	11	5	A	Fan Alarm		Equal to F/P alarm
	12	4	A	Rx Sync Alarm		Equal to F/P alarm
	13	3	A	Loopback Error Alarm		Equal to F/P alarm
	14	2	A	BER Alarm		Equal to F/P alarm
	15	1	A	Far-End Alarm		Equal to F/P alarm
	16	0	A	Telemetry Down Alarm		Equal to F/P alarm
3	17	7	A	Data Loss Ch1 Alarm		Equal to F/P alarm
	18	6	A	Data Loss Ch2 Alarm		Equal to F/P alarm, where applicable
	19	5	A	Data Loss Ch3 Alarm		Equal to F/P alarm, where applicable
	20	4	A	Data Loss Ch4 Alarm		Equal to F/P alarm, where applicable
	21	3	S	Data Loss Ch1 Alarm Disabled		SW1 pos 1
	22	2	S	Data Loss Ch2 Alarm Disabled		SW1 pos 2, where applicable
	23	1	S	Data Loss Ch3 Alarm Disabled		SW3 pos 3, where applicable
	24	0	S	Data Loss Ch4 Alarm Disabled		SW3 pos 4, where applicable
4	25	7	S	Loopback Test Source		SW1 pos 3 (0 = Internal, 1 = External)
	26	6	S	Loopback Error LED Mode		SW1 pos 4 (0 = Latched, 1 = Momentary)
	27	5	S/C	Loopback Channel 1 Enabled	Loopback Channel 1 On/Off	Front panel switch
	28	4	S/C	Loopback Channel 2 Enabled	Loopback Channel 2 On/Off	Front panel switch, where applicable
	29	3	S/C	Loopback Channel 3 Enabled	Loopback Channel 3 On/Off	Front panel switch, where applicable
	30	2	S/C	Loopback Channel 4 Enabled	Loopback Channel 4 On/Off	Front panel switch, where applicable
	31	1	S	AIS Disabled		SW1 pos 5
	32	0	S	Bridge Disabled (Aux Enabled)		SW1 pos 8
5	33	7	N/A	Future Use		
	34	6	N/A	Future Use		
	35	5	N/A	Future Use		
	36	4	N/A	Future Use		
	37	3	S	Far-End Address Invalid		1=Address>08
	38	2	S	Far-End Address MSB		000=01, 001=02, 010=03,
	39	1	S	Far-End Address LSB+1		011=04, 100=05, 101=06,
	40	0	S	Far-End Address LSB		110=07, 111=08
6	41	7	S	Near-End RSL MSB		**RSLVOLTAGE » Binary Byte(integer) x 0.04 Volts**
	42	6	S	Near-End RSL MSB-1		
	43	5	S	Near-End RSL MSB-2		*Note The 8-bit binary value (0-255) represents*
	44	4	S	Near-End RSL MSB-3		*RSL values between -50 dBm and threshold.*
	45	3	S	Near-End RSL MSB-4		*Radio paths with higher RSL values will read*
	46	2	S	Near-End RSL MSB-5		*approximately five (5) to ten (10) VDC on the radio's*
	47	1	S	Near-End RSL MSB-6		*front panel test point but be limited to a maximum*
	48	0	S	Near-End RSL MSB-7		*binary reading of 255 which represents 5 VDC.*
7	49	7	S	Near-End Tx Power MSB		
	50	6	S	Near-End Tx Power MSB-1		
	51	5	S	Near-End Tx Power MSB-2		
	52	4	S	Near-End Tx Power MSB-3		8-bit byte derives voltage or dBm
	53	3	S	Near-End Tx Power MSB-4		**TxPWRVOLTAGE » Binary Byte(integer) x 0.02 Volts**
	54	2	S	Near-End Tx Power MSB-5		
	55	1	S	Near-End Tx Power MSB-6		
	56	0	S	Near-End Tx Power MSB-7		
8	57	7	S	Both Fans Bad		Only applies if Point 11=1
	58	6	S	Tx Synth Unlock		Only applies if Point 9=1
	59	5	S	Rx Synth Unlock		Only applies if Point 9=1
	60	4	S	Input Line Driver		Only applies if Point 9=1
	61	3	S	Digital Hardware		Only applies if Point 9=1
	62	2	N/A	Future Use		**Key: A = Alarm**
	63	1	N/A	Future Use		**S = Status**
	64	0	N/A	Future Use		**C = Control**

Table 3-F: TBOS Map for the LYNX.sc E1s

3.14.4 AUX DATA (Digital Service Channel) Connection

The AUX DATA port is a separate wayside serial port which can be configured to allow the connection of any user serial data (to 9600 baud) through the radio network. In the default configuration, this service channel is “bridged” to the diagnostics port, providing TBOS network management for far-end radios including radio network management through repeaters and hubs. Connection to the AUX DATA port is an RS-232 or RS-422 serial interface, identical to the diagnostics port (see Section 3.14.3). This port does not affect the E1 traffic on the *LYNX.sc* radio.

For TBOS network management, or when the AUX DATA port is used as a clear service channel, co-located radios can be wired to one another to provide the information throughout the network. At a repeater or hub location, bridging is accomplished by cable connections between co-located *LYNX.sc* radios, via their AUX DATA ports, as shown in Figure 3-25 and 3-26. Figure 3-27 illustrates the pin-to-pin connections for this configuration. There is a related DIP switch position, as shown in Figure 3-27, that makes the AUX DATA port usable for customer data instead of the TBOS network management information. The factory default setting for this DIP switch is for TBOS network management.

For non-TBOS external site management systems can be used with the *LYNX.sc* radios; Figure 3-26 shows a typical application. Here the reporting relies on external devices to communicate over the clear service channel of the *LYNX.sc* radio. Each radio is given a site location (see Section 3.14.1) and information on the radio status and control is fed through the diagnostic port to a remote terminal unit (RTU). These RTUs have the capability of providing for other external inputs at the remote site, for complete network management. Communication from each RTU is fed via the RS-232 port to the AUX DATA connector on the radio, in this configuration no bridging is required.

RTUs that do not support TBOS can alternatively connect to the LYNX.sc alarm connector for discreet TTL alarms and/or test point voltages.

If you are using TBOS network management and want full information on the far-end radio (even in a single-hop application), the bridge function must be enabled.

The service channel can only be used for TBOS network management or for Aux data, not both. When selected for TBOS, no other data should be connected to the AUX DATA port.

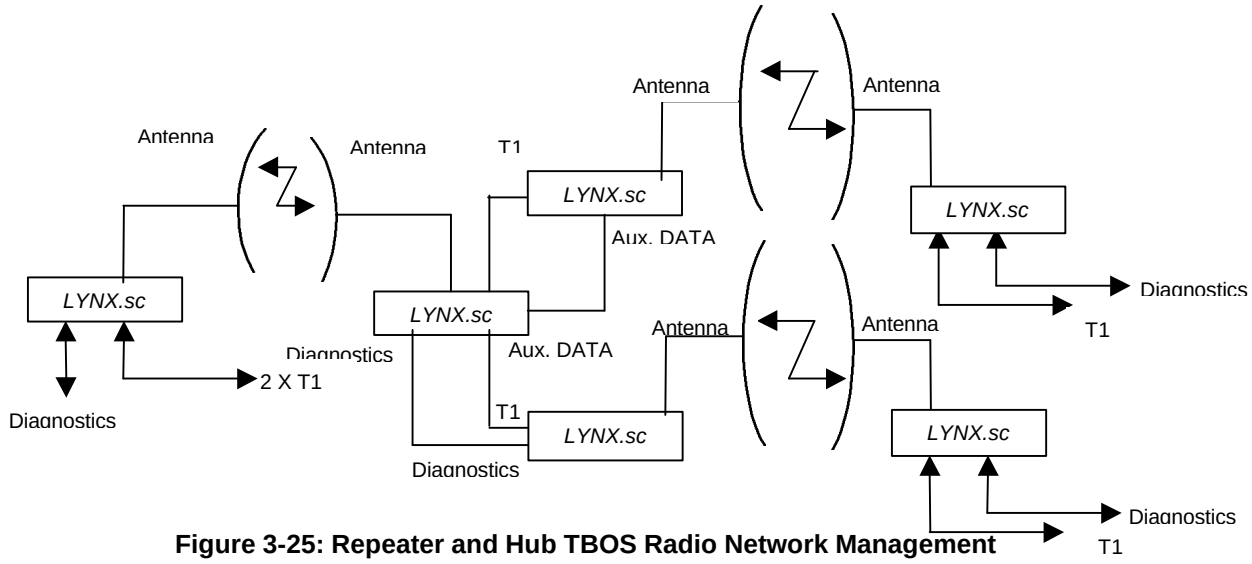

Figure 3-25: Repeater and Hub TBOS Radio Network Management

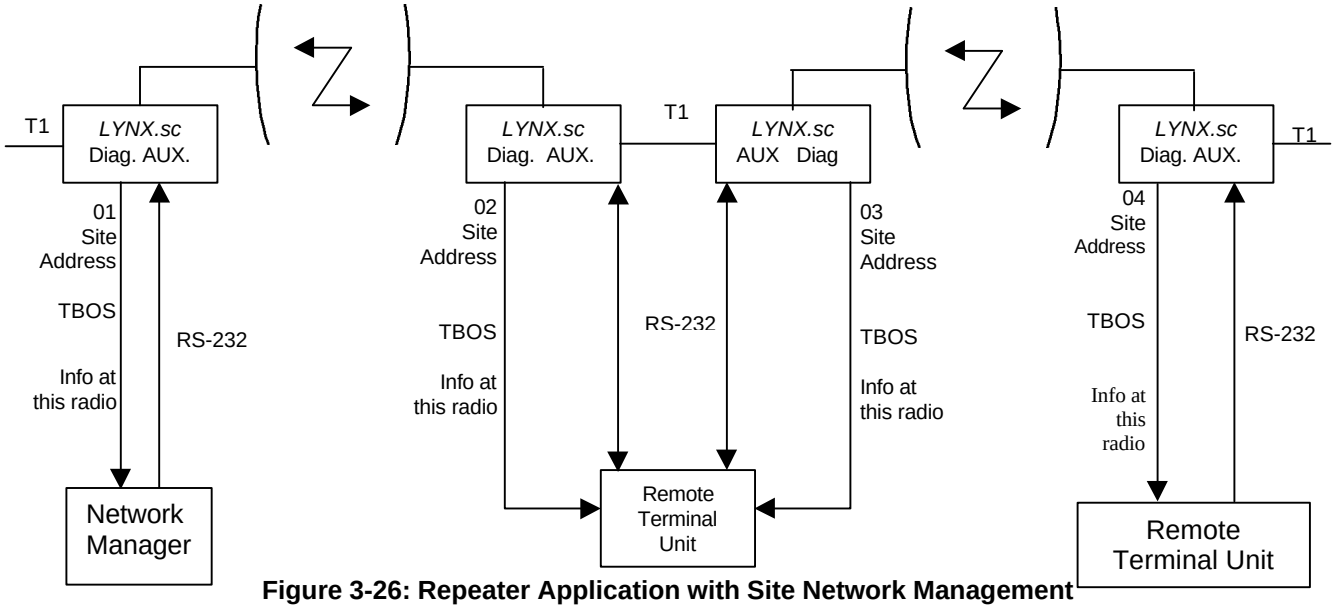

Figure 3-26: Repeater Application with Site Network Management

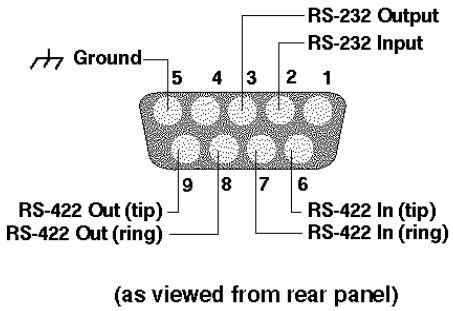

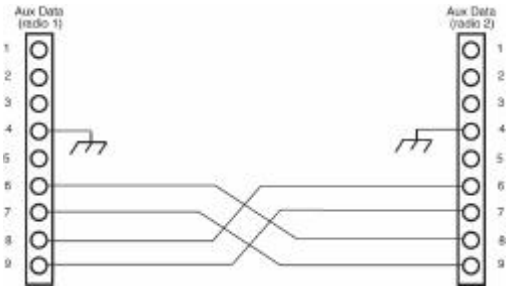

Figure 3-27: AUX DATA Cable Connection for Repeater/Hub

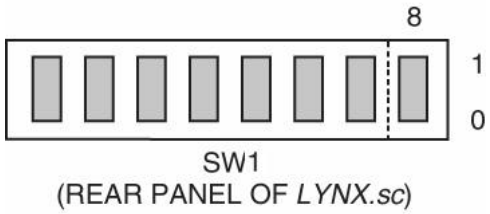

	8
AUX DATA Enabled	1
TBOS Bridged	0

Figure 3-28: AUX Data Selection

3.14.5 Protect Port Connection (Preliminary Information)

This feature is not yet available as of the publishing date of this manual.

The protect port is an 8-pin modular jack connection which is used in conjunction with an auxiliary piece of equipment called a *LYNX.SC*.mhs. The *LYNX.sc* protection port implements control information for the purposes of Monitored Hot Standby (MHS) or Space Diversity (SD) radio configurations. Purchase of the *LYNX.SC*.mhs equipment is required to implement this feature of the *LYNX.sc* radio. Details of the specific connection requirements to this equipment are supplied in the *LYNX.SC*.mhs manual.

MHS is a configuration of equipment which essentially supports a “back-up” radio, in case of radio hardware failure. For the *LYNX.sc* this is accomplished by connecting the antenna and E1 connections to the *LYNX.SC*.mhs unit, and then connecting the *LYNX.SC*.mhs unit to two separate and identical *LYNX.sc* radios. The *LYNX.SC*.mhs unit provides the capability to switch between connected *LYNX.sc* radios in case of a radio hardware failure. There is an interruption in radio traffic when this switching occurs, however, radios are typically able to resynchronize and establish communications in a few seconds (depending on path length and path availability). A typical MHS configuration is shown in Figure 3-29.

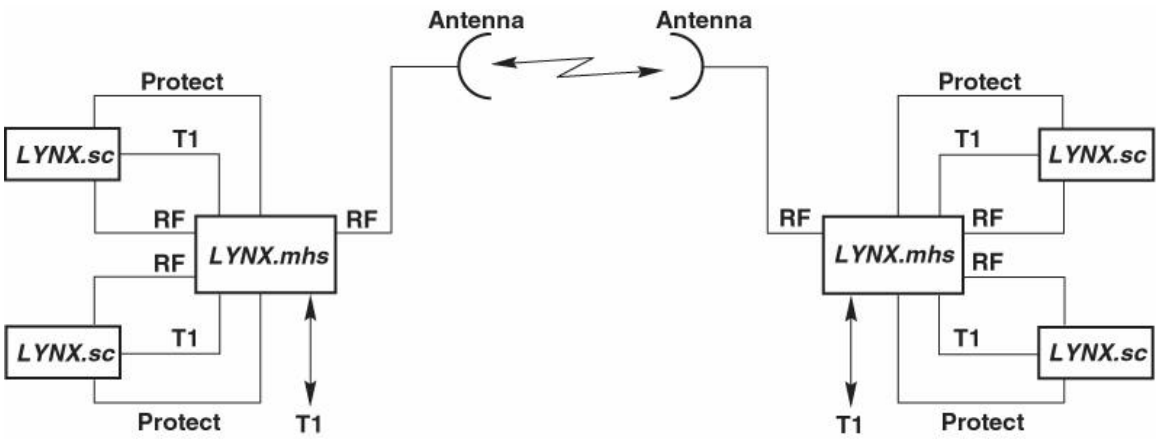

Figure 3-29: MHS Configuration

3.14.6 Protect Port Connection (Preliminary Information)

This feature is not yet available as of the publishing date of this manual.

Space Diversity (SD) is a similar application for radios where there is a “back-up” path for the radio in case of radio failure or path outage problems. This type of application is typically configured as two separate radios at the same site connected to two separate antennas. The separate antennas yield a slightly different path and therefore may provide better performance in cases of path outage due to weather or interference. There is an availability improvement due to multipath fading in a SD configuration as compared to a non-protected system configuration. A representative SD configuration is shown in Figure 3-30.

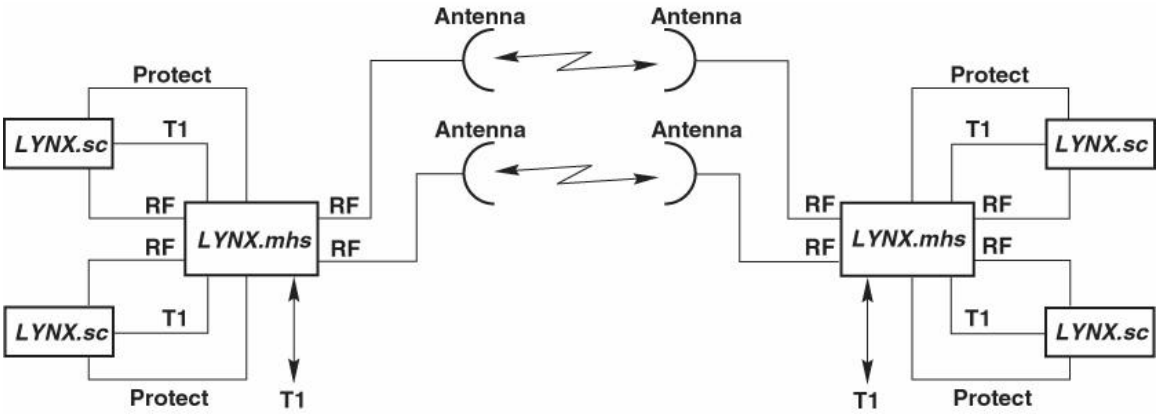

Figure 3-30: SD Configuration

Your Notes on the *LYNX.sc* Radio

4. Troubleshooting

4.1 Regular Maintenance

The *LYNX.sc* radios do not require any regular maintenance, however, it is prudent to monitor the radio link at regular intervals to assure that the link conditions are not changing. When visiting a radio site for maintenance, the following items may be checked and their results recorded:

- RSL Voltage
- PWR Voltage
- Far-end RSL Voltage
- Alarm conditions
- Verify radio has adequate ventilation

If any alarm conditions exist, they should be recorded, and troubleshooting procedures from this Section of the manual should be followed.

4.2 Changing Frequency Plans

The *LYNX.sc* RF frequency selections are listed in Section 3.5. The near-end radio and the far-end radio must be corresponding (e.g. A1 / A2). The frequency of a given *LYNX.sc* terminal is set by the specific filter, the physical orientation of this assembly, and the setting of corresponding DIP Switches. (See Section 3.12.1 for more details.)

With respect to a given filter, the frequencies are fixed, because tuned RF filters are required for normal operation. Changing of the (pretuned) radio frequencies may be required when installing spares or for special situations, such as interference mitigation. This is accomplished by installing an alternate filter or reorienting the existing filter.

For any given model of *LYNX.sc* (2.4 GHz 1xE1, 2.4 GHz 2xE1, 5.8 GHz 1xE1, 5.8 GHz 2xE1, or 5.8 GHz 4xE1), the frequency channel can be changed by swapping and /or reorienting the filter.

It is not necessary to remove the cover assembly of the LYNX.sc

1. Remove any cables connected to the antenna connector on the diplexer (filter) and then remove the two screws which mount the filter to the *LYNX.sc* chassis.
2. Slowly remove the filter from the chassis being careful to not endanger the cables that are connected to the rear side of the filter.
3. Disconnect the two SMA connectors that are attached to the rear of the filter with a 5/16” open end wrench.
4. Select the new filter or orient the existing filter such that the frequency channel label on the filter (showing the DIP switch positions) is right-side-up corresponding to the desired frequency channel.
5. Connect the two SMA connectors to the new or reoriented filter with the 5/16” open end wrench.
6. Slowly place the wired filter assembly so that it is flush with the rear panel.
7. Install the two screws which mount the filter to the rear panel.
8. Refer to the rear panel filter label or Section 3.12.1 for DIP Switch settings to correspond to the new filter and reattach the antenna cable.

As an example, the filter assemblies of an A1 and A2 terminal are identical. They are simply installed differently. An A1 terminal can be changed into an A2 by removing the filter and rotating it 180 degrees and reinstalling the filter. The DIP switch positions need to match the filter orientation, per the appropriate filter label.

4.3 Using a Spare Terminal

One spare *LYNX.sc* terminal of a given model type (2.4 GHz 1xE1, 2.4 GHz 2xE1, 5.8 GHz 1xE1, 5.8 GHz 2xE1, or 5.8 GHz 4xE1) will service any other radio in that same model type, independent of frequency channel plan. For example, a 5.8 GHz E1 channel A2 can be used as a spare for any A, B or C channel E1 radio at 5.8 GHz. See Section 4.2 for changing frequencies of a spare radio.

Customers with several radios, or radios in critical operations are encouraged to purchase one or more spare radios of each model in their system. This will allow rapid restoration of radio service in the unlikely event of a radio failure.

4.4 Technical Support

Western Multiplex provides 24-hour telephone technical support for installed *LYNX.sc* radios. Customers are encouraged to troubleshoot the radio and link in accordance with the latter part of this section in this manual before contacting Western Multiplex. Western Multiplex also has a limited supply of *LYNX.sc* radios that can be loaned to out-of-service customers for installation while units are being repaired. Loaner supply is limited, and is only used for critical applications on a first-come, first-served basis.

Customer service #: +1 408 542-5390

4.5 Repair Policy

The *LYNX.sc* terminal includes comprehensive alarm indicators designed to diagnose potential faults. Should a fault occur, it often may be resolved by operator adjustment.

Should a fault occur that cannot be resolved by operator adjustment and has been confirmed by looping terminals together on the bench (See Section 4.9), then the equipment should be returned to the factory for repair.

The *LYNX.sc* radio is a complex system not designed for user repair. Do not remove the cover or open any part of the *LYNX.sc* terminal. The complete *LYNX.sc* terminal should be sent back in its original packing material for factory repair.

Please contact the factory in advance of returning the product. You will be assigned a Return Material Authorization (RMA) number that authorizes your return. Units sent to the factory without an RMA number may be delayed in the processing of the repair. Be sure to include the following information:

- RMA number
- description of the problem
- your name and telephone number
- return shipping address
- urgency of repair

Please refer to the published Warranty policy for repair policy details.

LYNX.sc radios should be packaged in their original packing boxes for shipment whenever possible Western Multiplex can provide an empty box shipment to facilitate proper packaging. Regardless, proper and adequate packaging must be used for shipments to protect the radio(s) from damage. Western Multiplex can not be held responsible for any repairs due to inadequately packed materials. Damage caused by improper packing will likely result in higher repair costs and delays (refer to the Warranty section at the beginning of this manual).

4.6 Front Panel Status LEDs

There are several front panel status LEDs on the *LYNX.sc* radio. These LEDs indicate conditions where either a hardware failure has occurred or the radio link is not optimum. In many cases, a combination of LEDs may be illuminated. The following sections describe the necessary troubleshooting procedures should any LED(s) indicate a problem during or after installation.

4.6.1 DATA LOSS Alarms

Function:

These DATA LOSS Alarms indicate that no CEPT-1 signal is present at the rear panel CEPT-1 interface. On a multiple-capacity radio, the DATA LOSS 1 alarm relates to the DATA 1 ports while the DATA LOSS 2 alarm relates to the DATA 2 ports. On the 4xE1 model, DATA LOSS 1&2 are combined and DATA LOSS 3&4 are combined. This alarm does not indicate a radio hardware failure.

The capacity of the radio will determine how many DATA LOSS LEDs there are on the front panel.

Sometimes a double-capacity radio is put into service with only one input channel active, with the second channel planned for future growth. In this case, the DATA LOSS 2 alarm will be active because no CEPT-1 signal will be present. This alarm can be defeated by selecting a rear panel DIP switch as described in Section 3.12.4.

When there is a data loss condition, even if the data loss alarm has been disabled, the LYNX.sc radio injects AIS into the (RF) transmitted CEPT-1 signal.

Possible Causes:

- No CEPT-1 connection present at rear panel
- Improper pin connections of CEPT-1 connector
- No data on CEPT-1 input connector

Recommended Actions:

1. Check to make sure that there is a CEPT-1 connection present on either of the connectors (BNC) for the channel in alarm.

On a multiple-capacity radio, if the alarm is on a channel which is unused at this time, the alarm condition can be disabled by a rear panel DIP switch, as described in Section 3.12.4.

4. Verify that the CEPT-1 line has data active at the radio connection. This can be accomplished using a BER tester or signal analyzer. Also, signal activity can be verified by using an oscilloscope.

5. Verify that pin connections have been made properly (in accordance to Section 3.11). Make sure that you have connected the CEPT-1 with respect to the transmitting device.

6. Connect a BER tester or signal analyzer to the CEPT-1 Monitor INPUT port on the rear panel.

4.6.2 BER (Bit Error Rate) Alarm

Function:

This LED indicates that the traffic being received from the far-end radio is exceeding the bit error rate threshold of the radio (approximately 1 x 10^{-6}). This indicates that radio traffic currently has errors on it which may exceed acceptable levels. This LED will stay ON as long as the BER threshold is being exceeded. In some cases, it will turn ON and OFF, in which case there are bursts of errors causing intermittent degradation to the received data. In all cases, the LED will be on for at least 1 second for any group of errors which exceed the threshold, whether they are a burst of errors or a long string of errors.

If the RX SYNC alarm is on the near-end or far-end radio in addition to the BER alarm (on the same radio), the RX SYNC alarm should be the first priority for troubleshooting.

Possible Causes:

- Path fading due to atmospheric conditions (usually accompanied by Far-End BER alarm) and low RSL voltage reading
- Poor transmission line connections (usually accompanied by Far-End BER alarm) and low RSL voltage reading
- Antenna problems, misalignment or path clearance (usually accompanied by Far-End BER alarm) and low RSL voltage reading
- Interference
- Received signal level (RSL) is too strong
- Far-end radio transmitter circuitry is faulty or Tx Power adjusted incorrectly (too low)
- Near-end radio receiver circuitry is faulty

Recommended Actions:

An internal loopback test should be performed to verify that errors are occurring over the link:

- Verify that the near-end radio is set for Internal test mode and Latched Error LED (both default settings of rear panel DIP switch positions, as described in Sections 3.12.2 and 3.13.3).
- Press and hold (for approximately 3 seconds, then release) the Loopback Enable switch on the front panel of one radio (this will take radios out of service). Let this test run for a few minutes.
- If the ERROR LED illuminates, this is verification that errors are on the link and troubleshooting should continue.
- Press the Loopback Enable switch to deactivate loopback mode.

Next measure RSL by placing a voltmeter across RSL and GND test points. Compare this voltage to the Factory Test Data Sheet and estimate the RSL in dBm. Compare this to the RSL that was expected using path calculations (see Section 3.3.3). Press and hold the DISPLAY FAR END button and measure the far-end RSL (while continuing to hold the button). Compare this RSL to the Factory Test Data Sheet for the far-end radio and estimate the RSL in dBm. Again, compare this RSL to the expected RSL from the link budget calculations.

If RSL from both ends of the radio are approximately the same as each other, but lower than anticipated for this installation, then the likely cause of the BER alarm(s) is excessive losses between the radios. Excessive loss problems could include the transmission line at either end, all adapters, connectors, the antennas, the antenna alignment as well as the path itself (any obstructions or clearance problems). Antenna alignment, line-of-sight and path clearance should be verified; if this does not improve RSL, all devices between the radios and their antennas at both ends should be checked. Make sure all transmission line, connectors and any other devices are properly rated for operation at the radio's frequency (2.4 or 5.8 GHz).

If only one end has low RSL, this could be caused by low transmit output power from the opposite end radio. Verify that the transmitter output power of the radio opposite to the low RSL receiver has been set in accordance to path calculations, or EIRP restrictions (where applicable). Power adjustment must be performed by professional installation personnel only. The PWR test point can be used and compared with the Factory Test Data Sheet, the front panel recessed potentiometer can be turned clockwise to increase power. If an RF power meter is available, this can be connected to the RF output of the radio for precision measurement. This test will also verify that the radio transmitter is working properly.

If one terminal (or both) has high RSL, this could be caused by a very short path or interference. To verify the possible presence of interference, remove DC power to the radio which is opposite to the one that is reading high RSL. Once power is removed, measure RSL on the remaining radio. If RSL voltage is higher than that which is listed for "Threshold" in the Factory Test Data Sheet, then an interfering signal is present. If interference is suspected, the easiest potential remedy is to swap frequency channels on both sides of the link. See Section 4.2 for details. Swap frequencies on both terminals so that they are the opposite from their original settings (e.g. change A1 into A2 and A2 into A1). Make sure that you change the DIP switch settings to correspond to the channel change. After both ends are changed, reconnect the radios and determine if the BER alarm is still active. If the BER alarm is still active, other frequency channels can be installed, or other interference countermeasures can be tried, in accordance with Section 4.8.

If the BER alarm continues, an external BER test should be performed to verify the extent of bit errors on the link. See Sections 4.9 and 4.10 for details on bit error rate testing. A BERT can be connected on one side of the link, the External test mode selected on the near-end radio, loopback enabled and bit errors evaluated. If the BER is above acceptable levels, continue to troubleshoot the link.

If all path related and data input problems have been pursued and the BER alarm is still active, the problem could be related to a radio failure. While radio failure is typically indicated by more severe alarm conditions, it is possible that one of the radios may be out of specification, and this could be the cause of the BER alarm. A back-to-back test will verify proper radio operation. See Section 4.9 for details. A threshold test on both radios along with a test to verify proper RF output power would be beneficial.

Perform a back-to-back test before returning any radio terminal to the factory for repair. A back-to-back test verifies radio operation. (See Section 4.9).

If the radios successfully pass their back-to-back testing, the problem is likely with the path or the connections between the radio and the antenna or interference. Before reinstalling the radios, be sure to set the output power to the appropriate level for the installation and set rear panel DIP switches to the desired settings for the installation.

4.6.3 RX SYNC (Receiver Synchronization) Alarm

Function:

This LED indicates that the demodulator function is not synchronizing with the intended received signal.

When the RX SYNC alarm is active, the *LYNX.sc* radio injects AIS onto the received CEPT-1 (line transmit out), even if AIS has been disabled by rear panel DIP switch setting.

Possible Causes:

- Severe path fading due to atmospheric conditions (usually accompanied by Far-End RX SYNC or BER alarm) and low RSL voltage reading
- Poor transmission line connections (usually accompanied by Far-End RX SYNC or BER alarm) and low RSL voltage reading
- Antenna problems, misalignment, or path clearance (usually accompanied by Far-End RX SYNC or BER alarm) and low RSL voltage reading
- Improper radio settings (frequency channel, spread code)
- Interference
- Far-End radio transmitter circuitry is faulty
- Near-End radio receiver circuitry is faulty

Recommended Actions:

Check the following at each end of the link:

- Verify that rear panel filters are opposite channel plans on each end (e.g. one is A1 and other is A2).
- Verify that rear panel DIP switch settings match each installed filter (see Section 3.12.1).
- Verify that each radio is set to the same spreading code (see Section 3.12.3).
- Verify that all connections between radios and antennas are secure and all devices between radios and antennas are rated for the radio frequency band (2.4 or 5.8 GHz).

If RX SYNC alarm continues, follow recommended actions for a BER alarm as described in Section 4.6.2.

4.6.4 AIS OUT (Alarm Indication Signal)

Function:

This LED informs the user that the near-end receiver is operating at BER $\geq 1 \times 10^{-3}$ or is not receiving data and is therefore injecting AIS to the line transmit out of the CEPT-1 connector.

If the AIS has been disabled by rear panel DIP switch, AIS will not be injected onto the line transmit output unless there is a loss of sync (RX SYNC alarm).

Possible Causes:

- Local receiver has lost lock (RX SYNC)
- Local receiver is operating at BER $>1 \times 10^{-3}$

Recommended Actions:

1. Follow recommended actions for a RX SYNC alarm, as described in Section 4.6.3.

4.6.5 FAN Alarm

Function:

This alarm activates only when one or both of the internal fans are faulty.

Possible Cause:

- Faulty fan inside the radio.

Recommended Actions:

1. Check environmental conditions of the radio. Assure that the ambient temperature at the radio location is within specification of the radio. If not, apply environmental conditioning to radio location or place radio at alternate location where the environmental specifications are met.

2. Visually inspect radio mounting area and ensure that right and left sides of the radio chassis are unobstructed for airflow.

3. Verify that at least one of the internal fans are operational by temporarily covering some of the ventilation holes on the right side of the radio (as you face the front panel) with a thin piece of paper. Slowly pull the paper outwards away from the ventilation holes to determine if the fan is pulling the paper toward the chassis. This can also be checked on the opposite side of the chassis to verify that the fans are pushing air out of the chassis.

4. If at least one fan is working you may wish to postpone repair, as long as the unit is operating without any other errors (the radio is designed to operate with only one fan)

5. If neither fan is working or if typical operating environment is greater than 30°C, it is recommended that the unit be repaired at the soonest opportunity. Return the radio to the factory for repair. See Section 4.5 for details.

4.6.6 RADIO FAIL Alarm

Function:

The RADIO FAIL alarm indicates a known problem with the radio hardware.

Possible Causes:

- Internal synthesizers are unlocked
- Internal digital circuits have failed
- CEPT-1 connection is incorrect

Recommended Actions:

1. Disconnect the CEPT-1 connections from the rear panel.
2. If RADIO FAIL alarm clears, check CEPT-1 connections for proper pin connections and impedance as described in Section 3.11.
3. If RADIO FAIL alarm does not clear, remove power from the unit.
4. Check to make sure power supply voltages are within specification.
5. Even if the voltages were within specification, reapply power to the unit.
6. If RADIO FAIL alarm clears, place the radio back into service.
7. If RADIO FAIL alarm does not clear, perform a back-to-back test to verify radio operation, as described in Section 4.9.
8. If RADIO FAIL alarm is still active in a back-to-back test, return the radio to the factory for repair (see Section 4.5).

4.6.7 FAR END Alarm

Function:

This LED indicates that there is an alarm condition present on the far-end radio. When the DISPLAY FAR END button is pressed (and held), the status LEDs indicate the alarm conditions of the far-end radio.

Possible Cause:

- One or more alarm condition(s) exist on the far-end radio

Recommended Actions:

1. Press and hold the DISPLAY FAR END button and observe the LED status.

2. Follow instructions for troubleshooting the far-end radio in accordance to the appropriate LEDs which are in alarm, as described in Section 4.6.1 through 4.6.6.

4.7 Errors in the Data Stream

When the radio is in service, errors in the data stream may occur. This is usually known to the operator by either faulty data indications of downstream equipment, external bit error rate testing, or ERROR LED indications during internal loopback testing.

During internal test mode loopback testing, if an error is detected, the ERROR LED will illuminate. In default mode, this lamp will stay lit during loopback testing if a single error is detected. If Loopback has been performed over a period of time and the ERROR LED does not latch on, the radio link is operating completely error-free.

The ERROR LED only operates in internal test signal loopback mode. Use a BERT to detect errors when using an external test signal. See Sections 3.12.2, 3.13.2 and 3.13.3 for more details.

It is possible that no alarms appear on the front panel during normal operations, but there are errors present in the data stream. If the BER LED is lit, this indicates rather severe error conditions and it is best to follow the procedures provided in Section 4.6.1. However, some errors will not result in the BER alarm (such as bipolar violations, slow "dribbling" errors, improperly terminated CEPT-1 connections or incorrect settings of switches), but will be exhibited on downstream data processing equipment or during a BER test. In other cases, there may be data errors due to atmospheric conditions (fading), interference or other reasons, but not at a high enough error level to be indicated with the BER alarm LED. In the case of these types of errors, the following information can be helpful to troubleshoot the radio link.

Indications:

- In Loopback Mode, ERROR LED is illuminated
- During external BER test, test equipment indicates errors
- Downstream equipment (mux, channel bank, CODEC, router, etc.) indicates errors

Possible Causes:

- Path fading due to atmospheric conditions
- Poor transmission line connections
- Antenna problems, misalignment or path clearance
- Received signal level (RSL) is too strong
- Far-End radio transmitter circuitry is faulty
- Near-End radio receiver circuitry is faulty
- Interference

Recommended Actions:

1. Verify CEPT-1 wiring in accordance to Section 3.11.

2. Even if the BER alarm LED is unlit but errors continue, follow the instructions described in Section 4.6.2

4.8 Interference Countermeasures

The recommended interference countermeasures available to the *LYNX.sc* operator are as follows:

1. Short Paths

The single most effective countermeasure against interference is to maintain "short path" length. This may be achieved by dividing long paths into multiple small paths by cascading hops. Intermediate repeaters may be formed using back-to-back *LYNX.sc* terminals and transmit output power reduced, if required.

By definition, "short path" is defined as a path where fades are extremely rare and signal levels vary by no more than ±3 dB during fades. This distance will vary with the RF frequency. Typically a "short path" is defined as any path length shorter than 5 miles at 5.8 GHz or 7 miles at 2.4 GHz.

2. Narrow Beam Antennas (high gain)

This is the next most effective countermeasure. Narrow beam antennas ensure that the transmitted power is sent in a single direction and this minimizes the possibility of causing interference inadvertently to other users. Narrow beam antennas also reject off-azimuth signals being received from potential sources of interference and have high gain which boosts desired receive levels and improves the carrier to interference ratio. When selecting narrow beam antennas, it is helpful to know that larger antennas generally outperform smaller antennas. Another important antenna specification is the front-to-back ratio which ensures rejection of unwanted signals from azimuth angles behind the antenna.

3. Frequency Selection

This is another very effective countermeasure. The *LYNX.sc* radio offers several distinct non-overlapping frequency channel plans (see Sections 3.5 and 4.2) and the radio's RF filter is able to reject interference more than 10 MHz away from the receive frequency. Offset frequencies combined with other countermeasures may enable several receive channels to operate at a single hub site. Because of the limited spreading ratio used, frequency selection is more efficient than code selection for interference rejection when operating multiple *LYNX.sc* terminals at a single site. Interference can often be overcome by exchanging frequencies of both-ends of the radio link (e.g. change your A1 terminal to an A2 and change the other end from an A2 to an A1). Also, changing channel plans (e.g. from A to B) can be very effective. (See Section 4.2).

4. Antenna Polarization

Cross-polarized antennas can provide approximately 20 to 30 dB discrimination of unwanted signals. The actual discrimination will depend upon the antenna design and any rotation of polarization along the path, for example, due to reflections. Discrimination only exists between two orthogonal polarizations:

- vertical vs. horizontal or
- left-hand circular vs. right-hand circular

There is only 3 dB discrimination between circular and linear (vertical or horizontal) polarization.

Interference can sometimes be overcome by changing antenna polarization at both ends of the link.

5. Spreading Code Selection

There are 4 selectable spreading codes provided for the *LYNX.sc* radio (See Section 3.12.3). These codes are selected by DIP switches and provide some discrimination against interference from other *LYNX.sc* transmitters. The discrimination is limited to approximately 3 to 6 dB for radios using the same channel plan. This is the difference between the co-channel C/I when using different codes for the wanted and unwanted signals. When combined with a different frequency channel, the code discrimination improves significantly beyond 3 to 6 dB. See Section 3.12.3 for code selection details.

6. Transmit Power

The maximum level into the receiver is 0 dBm. Above this level, errors may occur in the receive data stream. Transmit output power should be reduced on very short paths to avoid overload.

7. Equipment/Antenna Location

Occasionally, interference is caused by the radio or the antenna being too close to another similar transmitter. For example, at 2.4 GHz, microwave ovens can exhibit interference if mounted near the radio or antenna. Other high powered transmitters may also cause interference. Moving the radio, the antennas, or the interfering equipment can reduce or eliminate interference.

Interference countermeasures rely to some extent on the measurement of the received interference level and frequency. Prior to turning up a new hop, a spectrum analyzer can be used to monitor the spectrum at each end to check for possible interfering signals. See Section 4.8.1 for more details.

4.8.1 Use of a Spectrum Analyzer to Evaluate Potential Interference

Connecting to the antenna and using "peak hold" on a spectrum analyzer, the spectrum between 2.4 GHz and 2.5 GHz (for 2.4 GHz radios) or 5.7 GHz and 5.9 GHz (for 5.8 GHz radios) can be swept and any signals being received at levels above the radio's specified threshold identified. If potential interfering signals are found, then the *LYNX.sc* frequency plan can be changed to avoid a receive channel which may contain significant interference (see Section 4.2).

For example, interference may be reduced by moving from the A1/A2 plan to the B1/B2 plan or by swapping terminals or RF filters so that A1 becomes A2.

Signals outside the range of 2.4 GHz to 2.5 GHz (for 2.4 GHz radios) and 5.7 GHz to 5.9 GHz (for 5.8 GHz radios) may be ignored: they will not cause interference.

If a spectrum analyzer is not available, the RSL voltage can be used to indicate the background noise and interference level within the receiver RF filter band when the far-end transmitter is turned off. With the far-end radio turned off, if an RSL voltage level above the radio's threshold level is measured, there is potentially interference in this frequency channel.

When using a spectrum analyzer for determining the presence of interference, very narrow resolution bandwidth settings must be used to detect signals down to the radio's threshold (approximately -87 to -95 dBm, depending on radio type).

4.9 Back-to-Back Testing

Back-to-back testing, as shown in Figure 4-1, is an ideal method of testing the *LYNX.sc* radios. This testing eliminates link problems caused by auxiliary equipment, installation, or the radio path and isolates potential radio hardware problems. Back-to-back testing must be performed with both radios at the same location. The following test equipment is required:

- DC power source capable of supplying approximately 90 Watts (total) to the radios (or two AC adapters)
- One low-loss coaxial cable, N-to-N male
- One (or more) coaxial in-line calibrated fixed attenuators, 40 to 80 dB total attenuation

The following test equipment may also be useful to perform further testing of the *LYNX.sc* radio:

- BER tester
- Variable (60 dB range or more) RF attenuator (rated for the proper frequency, 2.4 or 5.8 GHz)
- RF power meter

Back-to-back testing must be performed to verify a radio problem before returning any radio to the factory for repair.

When the equipment is connected as shown in Figure 4-1, without connecting the BER tester, both *LYNX.sc* radios should have no alarm conditions, except for DATA LOSS. When Loopback is enabled at either end, no errors should be registered by the ERROR indication. If these conditions have been met, then it is likely that the *LYNX.sc* radio is operating in accordance to specifications. If errors or alarms occur during this test, verify that all DIP switch settings are properly set. If alarms or errors are still present, the radio is likely to be faulty.

If further troubleshooting is required for the radios themselves, a BER tester can be inserted into the rear panel bantam jacks (or the appropriate input/output data port) so an end-to-end or loopback test can be performed to assure that no errors are present in the radio link. In addition, a variable RF attenuator can be inserted between the radios to fade down the path to determine that the threshold specification is being met. The BER and threshold tests can be run in both directions to isolate the radio problem (if any). More information on BER testing is provided in Section 4.10. An RF power meter can be used to individually test each radio's output power.

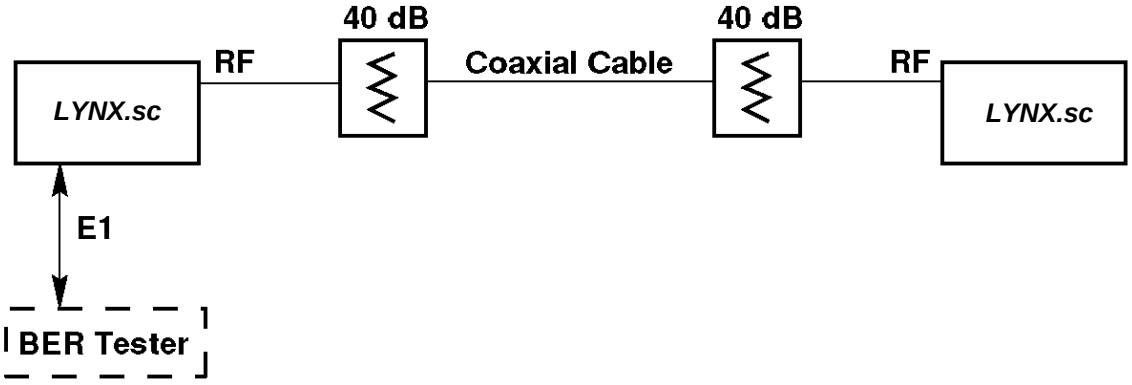

Figure 4-1: Back-to-Back Test Configuration

(When using a BER tester, initiate loopback on connected *LYNX.sc* and select external test mode as described in Section 3.12.2).

The LYNX.sc radios will be damaged if appropriate attenuation is not supplied between radios. You must provide a minimum of 40 dB and no more than 80 dB attenuation between the two radios.

4.10 BER (Bit Error Rate) Testing

Bit error rate (BER) testing is the preferred way to evaluate a radio link's performance. It can be performed from end-to-end or in loopback mode (which tests both directions of the radio path). Figure 4-2 illustrates a typical BER test configuration for loopback testing (which may include the radio's path instead of in-line attenuators). Figure 4-2 illustrates a typical BER test configuration for end-to-end testing.

When performing BER testing, make sure of the following:

- Disconnect all CEPT-1 inputs and outputs to both radios.
- Connect BER tester to bantam jacks or data in/output connector(s)
- Select external test signal for loopback testing using the DIP switches as defined in Section 3.12.
- Verify all DIP switch settings.
- The BER test pattern chosen must contain adequate 1's density

A 2^{15-1}, QRSS, or 3 in 24 test pattern may be used. The LYNX.sc uses HDB3 line coding.

If two BER test sets are used to measure the link performance separately in each direction, frame slips will occur unless the BER test sets are synchronized with one test set as the master and the other as the slave.

BER testing may be performed on the bench, with two terminals back to back, or over the radio path. Also, it may be performed from end-to-end (which requires two BER test sets over a link, the far-end unit slaved to the near-end unit's clock) or in loopback mode, as described in Section 4.9.
If BER testing indicates an unacceptable level of errors, follow the instructions in Section 4.6.2. or perform a back-to-back test as described in Section 4.9.

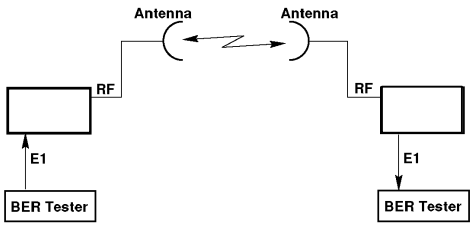

Figure 4-2: End-to-End BER Test Configuration

Your Notes on the *LYNX.sc* Radio

5. Appendices

Appendix A - Digital Line Interface Specifications

Information in Appendix A is referenced to the following document: ITU-T G.703

1. General Characteristics

Bit rate: 2048 kbits/s ±50 ppm

Code: HDB3

2. Specifications at the output ports

Bit Rate	2.048 Mb/s
Pulse Shape	All marks of a valid signal must conform with the mask irrespective of the sign. The value V corresponds to the nominal peak value.
Pair(s) in each Direction	One Coaxial pair
Test load impedance	75 ohms resistive
Nominal peak voltage of a mark (pulse)	2.37 V
Peak voltage of a space (no pulse)	0 ±0.237 V
Nominal pulse width	244 ns
Ratio of the amplitudes of positive and negative pulses at the center of the pulse interval	0.95 to 1.05
Ratio of the widths of positive and negative pulses at the nominal half amplitude	0.95 to 1.05

Table A-2: CEPT-1 Interconnection Specification

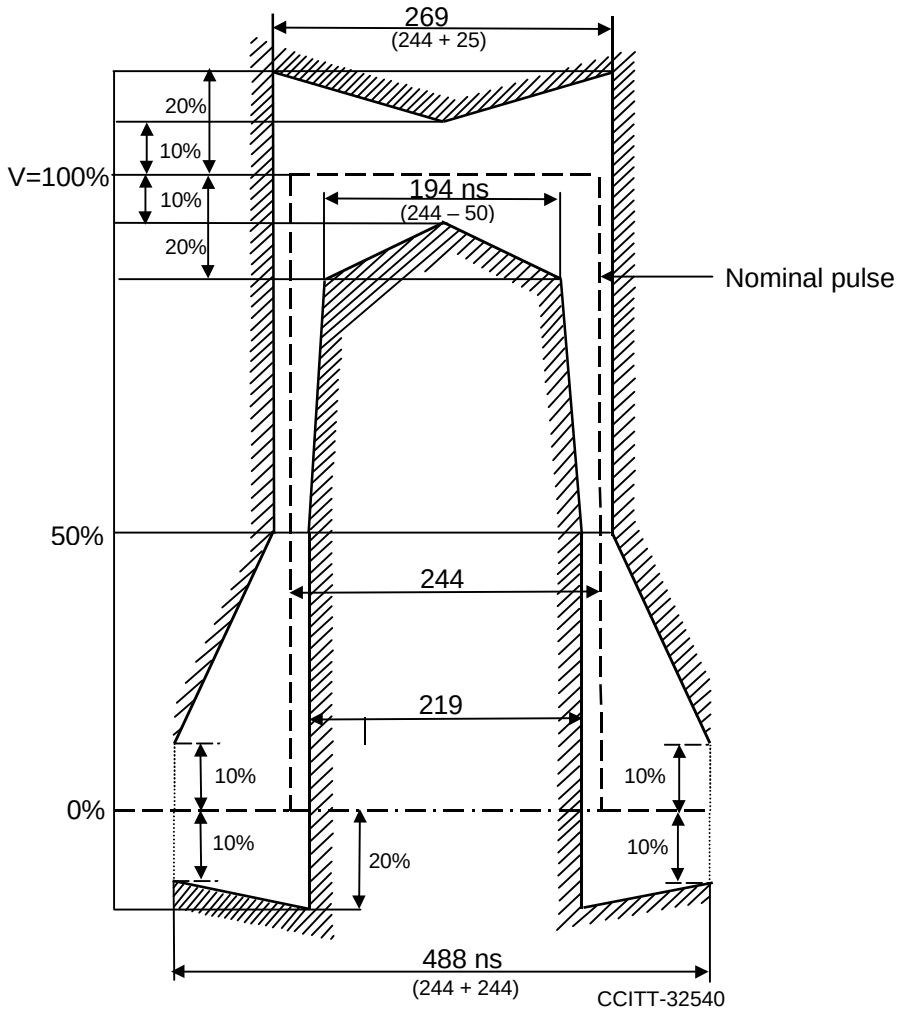

Note – V corresponds to the nominal peak

Figure A-1: Mask of the E1 Pulse (CEPT-1)

Appendix B - Rear Panel DIP Switches

The *LYNX.sc* radio has two separate eight-segment rear panel DIP switches, labeled SW1, and SW3. Upon shipment from the factory, these switches are set for factory default configuration, which is all switches down (in the “zero” position), except for SW3 positions 5 through 8, which are set to match the installed rear panel RF filter assembly (which determines the frequency channel for transmit and receive, such as A1, A2, B1, B2, etc.). The tables in this section provide a quick reference for the DIP switch functions and their settings.

DIP switch settings are noted by their position, either up (1), or down (0), not by on/off as may be printed on the DIP switch assembly.

Shaded switch positions are factory default

		1	2	3	4	5	6	7	8
SW1	1								
	0	0	x	0	0	0	0	0	0

1	2	Loss of Input Data Alarm
0	0	Enable (depends on model)
1	1	Disable

3	Loopback Test Source
0	Internal
1	External

4	Error LED Latch
0	Enable
1	Disable (Flash)

5	Rx AIS Output
0	Enable
1	Disable

Diagnostics Port	7
TBOS	0
Craft	1

Aux Data Port	8
Bridged (TBOS)	0
Enabled (Clear)	1

		1	2	3	4
SW2	1				
	0	0	0	0	0

1	CEPT-1 Ground	Note:
0	Floating	Not used
1	Grounded	on 2E/4E

		1	2	3	4	5	6	7	8
SW3	1							x	x
	0	0	0	x	x	0	0	x	x

1	2	Spreading Code
0	0	Code 1
0	1	Code 2
1	0	Code 3
1	1	Code 4

3	4	Loss of Input Data Alarm
0	0	Enable (depends on model)
1	1	Disable

Frequency	Xmtr	Rcvr	7	8
A1	2410	2453	0	0
A2	2453	2410	0	1
B1	2430	2473	1	0
B2	2473	2430	1	1

Table B-1: LYNX.sc 2.4 GHz 1xE1, 2xE1 & 4XE1 Switch Settings

Shaded switch positions are factory default

		1	2	3	4	5	6	7	8
SW1	1								
	0	0	0	0	0	0	0	0	0

1	**2**	Loss of Input Data Alarm
0	0	Enable
1	1	Disable

3	Loopback Test Source
0	Internal
1	External

4	Error LED Latch
0	Enable
1	Disable (Flash)

5	Rx AIS Output
0	Enable
1	Disable

Diagnostics Port	**7**
TBOS	0
Craft	1

Aux Data Port	**8**
Bridged (TBOS)	0
Enabled (Clear)	1

		1	2	3	4
SW2	1				
	0	0	0	0	0

1	**2**	CEPT-1 Ground
0	0	Floating
1	1	Grounded

		1	2	3	4	5	6	7	8
SW3	1								x
	0	0	0	0	0	0	0	0	x

1	**2**	Spreading Code
0	0	Code 1
0	1	Code 2
1	0	Code 3
1	1	Code 4

Frequency	Xmtr	Rcvr	**8**
A1	2421	2462.5	0
A2	2462.5	2421	1

Table B-2: LYNX.sc 2.4 GHz 2xE1 Switch Settings

	1	2	3	4	5	6	7	8
SW1 1								
0	0	0	0	0	0	0	0	0

1	Loss of Input Data Alarm
0	Enable
1	Disable

3	Loopback Test Source
0	Internal
1	External

4	Error LED Latch
0	Enable
1	Disable (Flash)

5	Rx AIS Output
0	Enable
1	Disable

Diagnostics Port	**7**
TBOS	0
Craft	1

Aux Data Port	**8**
Bridged (TBOS)	0
Enabled (Clear)	1

	1	2	3	4
SW2 1				
0	0	0	0	0

1	CEPT-1 Ground
0	Floating
1	Grounded

	1	2	3	4	5	6	7	8
SW3 1						x	x	x
0	0	0	0	0	0	x	x	x

1	**2**	Spreading Code
0	0	Code 1
0	1	Code 2
1	0	Code 3
1	1	Code 4

Frequency	Xmtr	Rcvr	**6**	**7**	**8**
A1	5735	5800	0	0	0
A2	5800	5735	0	0	1
B1	5755	5820	0	1	0
B2	5820	5755	0	1	1
C1	5775	5840	1	0	0
C2	5840	5775	1	0	1

Table B-3: LYNX.sc 5.8 GHz 1xE1 Switch Settings

Shaded switch positions are factory default

		1	2	3	4	5	6	7	8
SW1	1								
	0	0	0	0	0	0	0	0	0

1	**2**	Loss of Input Data Alarm
0	0	Enable
1	1	Disable

3	Loopback Test Source
0	Internal
1	External

4	Error LED Latch
0	Enable
1	Disable (Flash)

5	Rx AIS Output
0	Enable
1	Disable

Diagnostics Port	**7**
TBOS	0
Craft	1

Aux Data Port	**8**
Bridged (TBOS)	0
Enabled (Clear)	1

		1	2	3	4
SW2	1				
	0	0	0	0	0

1	**2**	CEPT-1 Ground
0	0	Floating
1	1	Grounded

		1	2	3	4	5	6	7	8
SW3	1							x	x
	0	0	0	0	0	0	0	x	x

1	**2**	Spreading Code
0	0	Code 1
0	1	Code 2
1	0	Code 3
1	1	Code 4

Frequency	Xmtr	Rcvr	**7**	**8**
A1	5741	5803	0	0
A2	5803	5741	0	1
B1	5772	5834	1	0
B2	5834	5772	1	1

Table B-4: LYNX.sc 5.8 GHz 2xE1 Switch Settings

Shaded switch positions are factory default

		1	2	3	4	5	6	7	8
SW1	1								
	0	0	0	0	0	0	0	0	0

1	**2**	Loss of Input Data Alarm
0	0	Enable
1	1	Disable

3	Loopback Test Source
0	Internal
1	External

4	Error LED Latch
0	Enable
1	Disable (Flash)

5	Rx AIS Output
0	Enable
1	Disable

Diagnostics Port	**7**
TBOS	0
Craft	1

Aux Data Port	**8**
Bridged (TBOS)	0
Enabled (Clear)	1

		1	2	3	4
SW2	1				
	0	0	0	0	0

1	**2**	**3**	**4**	CEPT-1 Ground
0	0	0	0	Floating
1	1	1	1	Grounded

		1	2	3	4	5	6	7	8
SW3	1						x	x	x
	0	0	0	0	0	0	x	x	x

1	**2**	Spreading Code
0	0	Code 1
0	1	Code 2
1	0	Code 3
1	1	Code 4

3	**4**	Loss of Input Data Alarm
0	0	Enable
1	1	Disable

Frequency	Xmtr	Rcvr	**6**	**7**	**8**
A1	5735	5800	0	0	0
A2	5800	5735	0	0	1
B1	5755	5820	0	1	0
B2	5820	5755	0	1	1
C1	5775	5840	1	0	0
C2	5840	5775	1	0	1

Table B-5: LYNX.sc 5.8 GHz 4xE1 Switch Settings

Appendix C - Rear Panel Data Connectors

The following figures illustrate the pin structure for all rear panel data connections. All figures are oriented as a customer would view them, facing the rear panel. DC power connection information is found in Section 3.7 of the manual.

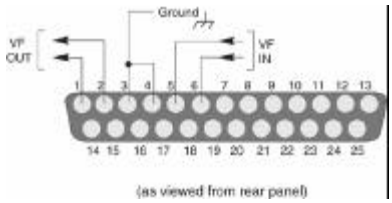

Figure C-1: VF Port Connection

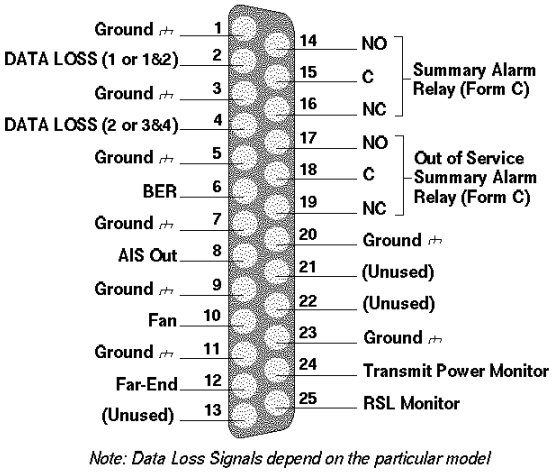

Figure C-2: Alarm Port Connections

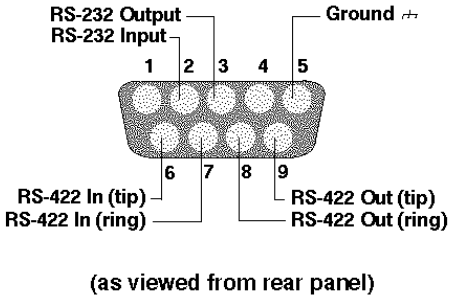

Figure C-3: Diagnostic Port 9-Pin D-Style Connector

Do NOT use both the RS-232 and RS-422 connections at the same time!

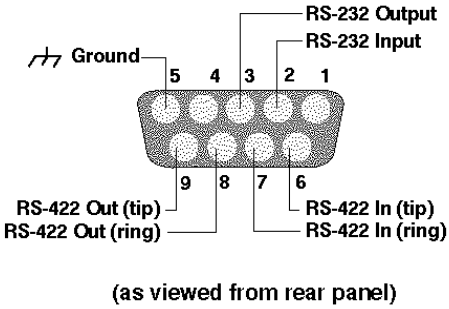

Figure C-4: AUX DATA Port 9-Pin D-Style Connector

Do NOT use both the RS-232 and RS-422 connections at the same time!

Your Notes on the *LYNX.sc* Radio

Index

A

AC 3-19
Accessories 2-22
AIS 2-7, 2-13, 2-20, 3-29, 3-30, 3-47, 4-13
Alarm connections 3-46
Alarm interface 3-47
Alarms 3-36, 4-7
Alignment, antenna 3-23
Antenna 2-3, 3-3, 3-24, 3-36, 3-39, 4-9, 4-19
Antenna connection 3-20
Antenna installation 3-22
Antenna planning 3-10
Availability calculation 3-7

B

Balanced E1 2-18
Balun 2-7, 2-18, 3-25
Bit error rate 3-40
Bit Error Rate 2-13, 2-14, 3-7, 3-30, 3-36, 3-41, 3-47, 4-9, 4-11, 4-17, 4-23
BNC 3-25

C

Calculations 3-5
Caution 1-2
CEPT-1 ..... 2-18, 3-25, 5-1, 5-2
CEPT-1 connection 3-36, 3-40, 3-47, 4-7, 4-17
Channel plan 3-12, 3-26
Coaxial cable 3-21
Code 3-28
Coding 2-2
Connections 2-7, 2-8, 2-15, 2-17, 2-18, 2-19, 3-25, 3-36, 5-1
Container 3-1
Controls 2-14
CSU/DSU 3-30

D

Data loss 3-29
DC 3-9, 3-17
DIP switch 3-31, 5-3
DIP switch settings 3-26
DIP switches 2-20
Dispersive fade 2-5, 3-6

E

EIRP 3-32
Environment 2-9
Error LED 3-42
Errors 4-17

F

Fade margin 3-6
Fans 4-14
Frequency 3-12, 4-2
Frequency plan 3-8
Fresnel 3-4
Front panel 2-11

G

Grounding 3-17

H

HDB3 ..... 4-23, 5-1

I

Icons 1-2
Installation 1-1, 2-22, 3-3, 3-31
Interference 4-18
ISO 9000 i

L

Line-of-sight 3-4
Link budget 3-5
Loopback 2-7, 2-14, 3-27, 3-40, 4-10, 4-17

M

Mechanical 2-10
MHS 3-56
Mounting 3-15

N

Note 1-2

O

Orderwire 2-8, 2-19, 2-21, 3-31, 3-36, 3-43, 3-44, 3-45
Output power 3-33, 3-34
Output power, adjust 3-37, 3-38, 3-39

P

Path 3-4
Path planning 3-10
Power 2-2, 2-9, 2-22, 3-3, 3-16, 3-39, 4-9, 4-19
Power connection 3-16
Power connection, AC 3-19
Power connection, DC 3-17
Power supply planning 3-9
Professional installation ..... iii, 1-1

R

Rear panel 2-16, 5-9
Receive signal level 2-12, 2-14, 3-3, 3-5, 3-22, 3-23, 3-24, 3-35, 3-47, 4-9, 4-20
Receiver 2-4
Regulatory ..... iii, 2-10

REN 3-43
Repair 4-5
Repeater configurations 3-54, 3-55
RF filter 3-26
RS-232/RS-422 ..... 2-19, 3-48, 3-49, 3-50, 3-53
RSL 3-24

S

SD Configuration 3-57
Shipping 2-22, 3-1
Spares 4-3
Spreading code 3-28
Switches 4-2
Synchronization 4-12
System 2-5, 2-6

T

TBOS 2-19, 2-20, 2-21, 3-43, 3-48, 3-51, 3-52, 3-53, 3-54
Technical support 4-4
Telephone 3-43
Test 2-8, 2-12
Tips 1-2
Tools 3-11
Transmission line 3-21
Transmitter 2-2, 3-37
Troubleshooting 4-1
Turn-up 3-31

W

Warranty v

For ISO Purposes -

Last Page of this Manual