Main Circuit

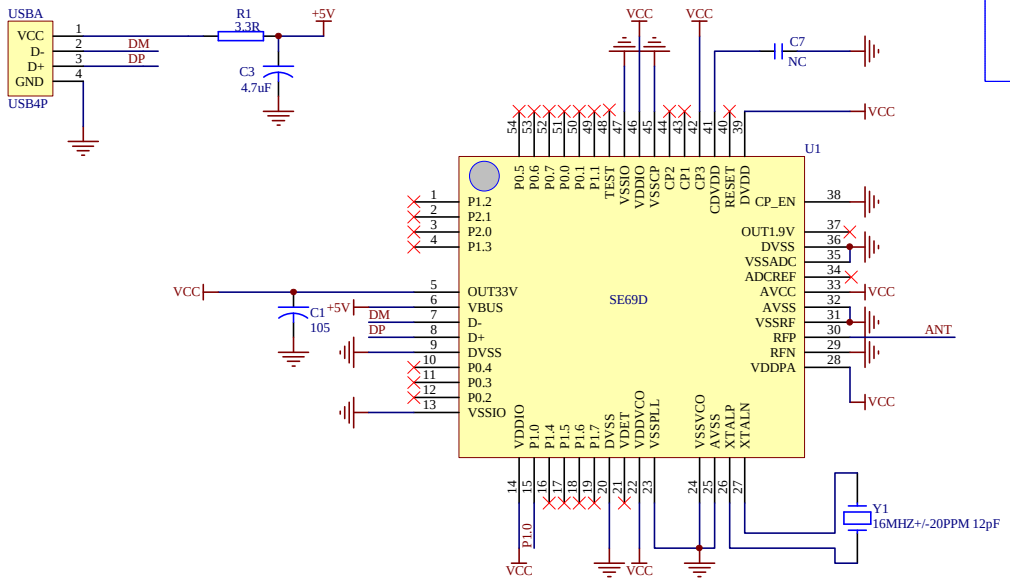

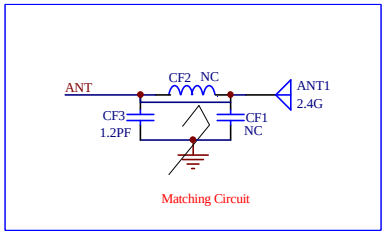

Created Date		2.4G Wireless Dongle Electrical Diagrams	
Created			Grade: A
Checked			
Standarded			
Approved			

08

PDF 文件使用 "pdfFactory Pro" 试用版本创建 www.fineprint.cn