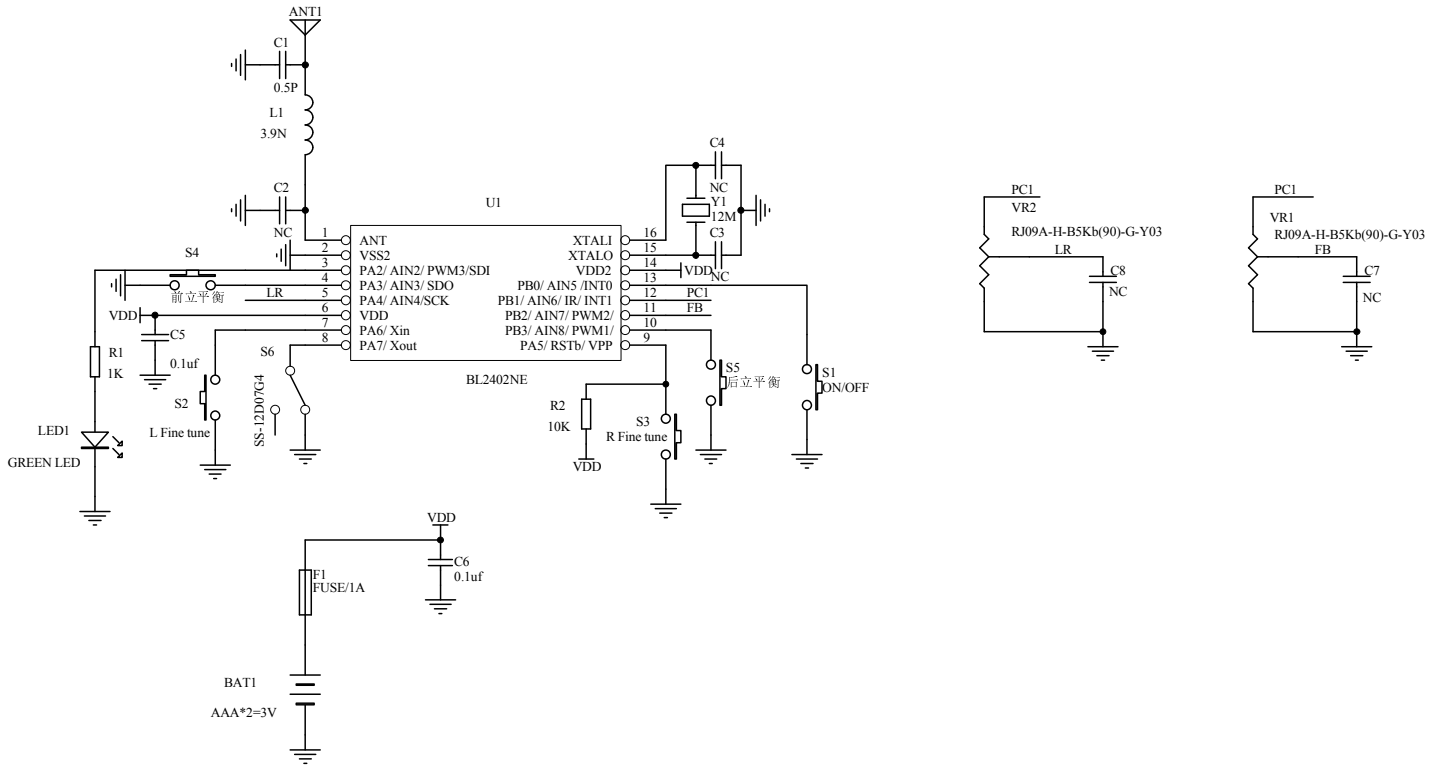

Spin Master (DongGuan) Toys Co., Ltd.

Drawing By: Jack Xu	**Date:** 25/08/2021	**Title:** 66808TX			
Checked By:	**Date:**	**Model NO:**			
Approved By:	**Date:**	**Size** A4	**Sheet** 1 **of** 1	**Revision** V2N	