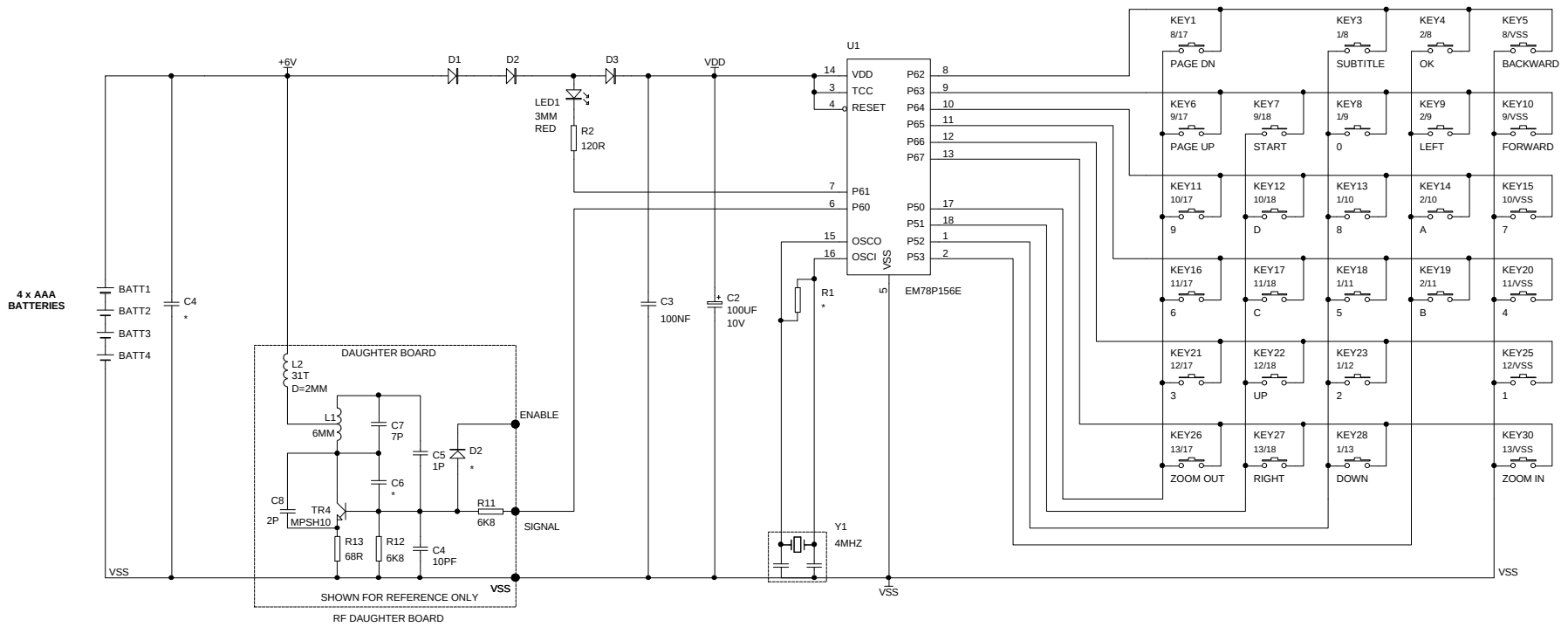

NOTES:-
1/ ALL UNSPECIFIED DIODES 1N4148 OR EQUIVALENT.
3/ ALL UNSPECIFIED RESISTORS ARE 0.125W 5%.
4/ ALL UNSPECIFIED CAPACITORS ARE AXIAL MLC TYPE.

"*" DENOTES COMPONENT NOT INSTALLED

Error : PICO.WMF File Not Found	DO NOT SCALE DRAWING	TITLE:	
	DRN BKW DATE 14/8/01	X10 VGA RF REMOTE UR85A	
	APPD. DATE	FIRST DRAWN 14/8/01	PRINT DATE 20:45:41 21-Aug-2001 / SHEET No. 1 of 1
	FILE C:\WINDOWS\DESKTOP\UR85AB.SCH	REVISION DATE 15/8/01	REV. B
	PICO ELECTRONICS Ltd., Eastfield Industrial Estate, Glenrothes, Fife, KY7 4NZ, SCOTLAND		