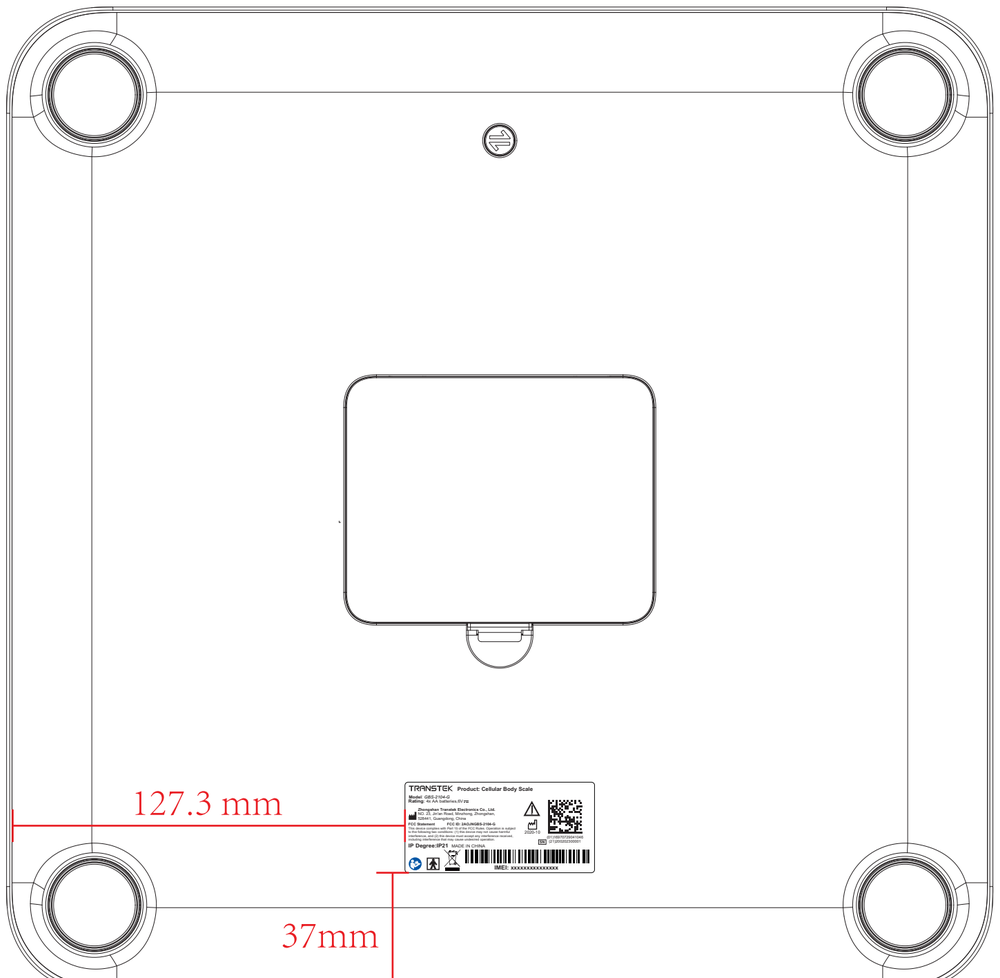
127.3 mm
37mm
TRANSTEK
Product: Cellular Body Scale
Model: GBS-T104-G
Rating: 4x AA batteries 6V 2Ω
Shenghao Transtek Electronics Co., Ltd.
Building 1, Jinxiu Industrial Park, Shangjiao,
Guiyan, Guangdong, China
FCC Statement
FCC ID: 2AAJN-GBS-T104-G
This device complies with Part 15 of the FCC Rules. Operation is subject
to the following two conditions: (1) This device may not cause harmful
interference, and (2) This device must accept any interference received,
including interference that may cause undesired operation.
IP Degree:IP21
MADE IN CHINA
IMEI2: XXXXXXXXXXXXXX