EXHIBIT D

(FCC Ref. 2.1033(b)(6))

"Report of Measurements/Test Facility/Test Equipment List"

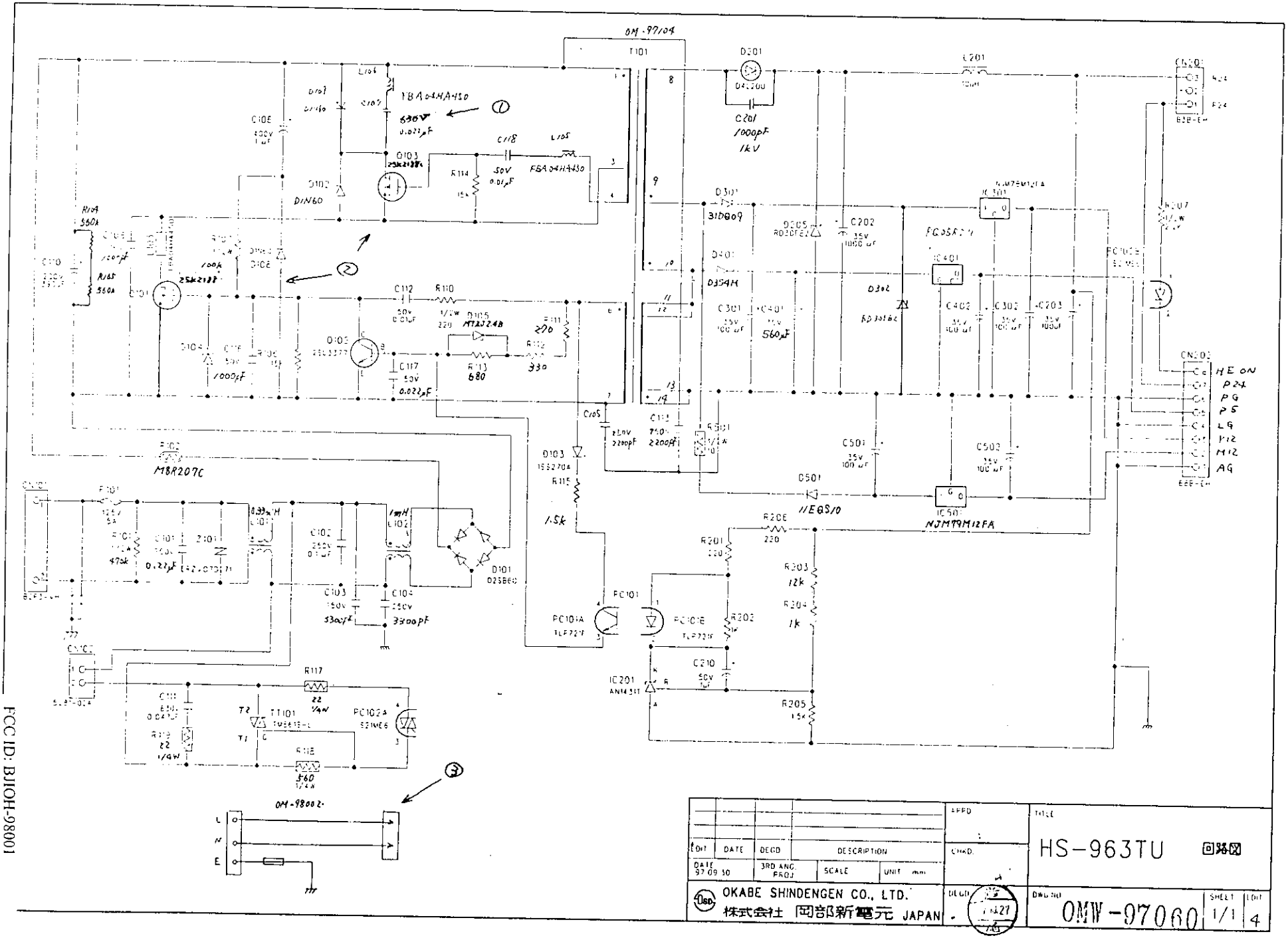

				APPD	TITLE HS-963TU
DIT	DATE	DEGD	DESCRIPTION	CHKD.	
DATE 97.09.30	3RD ANG. PROJ	SCALE	UNIT mm		
OKABE SHINDENGEN CO., LTD. 株式会社 岡部新電元 JAPAN				DEGD	DWG NO OMW-97060 SHEET 1/1 DIT 4

FCC ID: BJIOH-98001
EXHIBIT C(2)-1

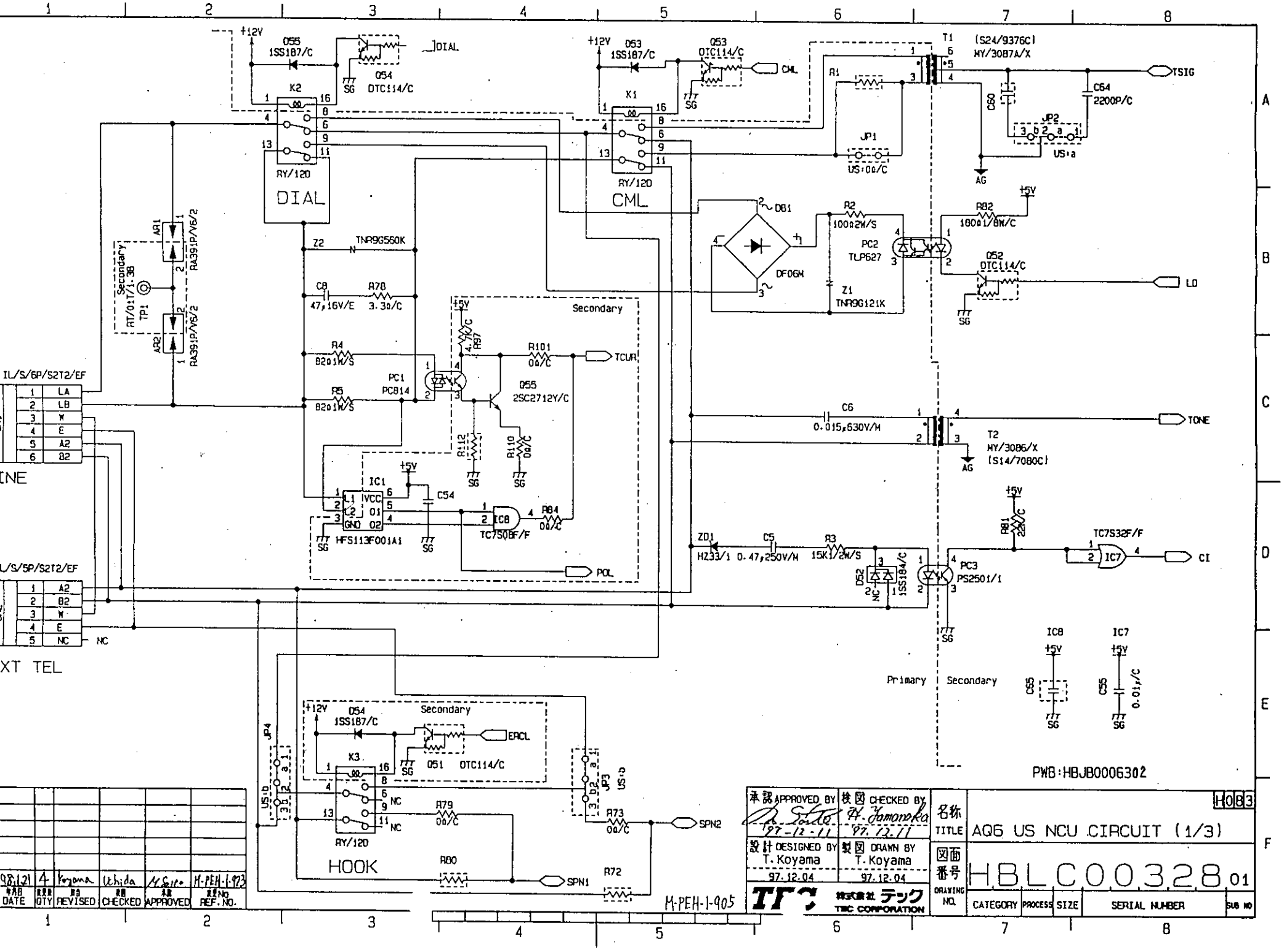
DIAL
CML
HOOK
Secondary
Primary
TSIG
LO
TONE
CI
TCUR
POL
ERCL
SPN2
SPN1
PWB:HBJB0006302
AQ6 US NCU CIRCUIT (1/3)
HBLC00328 01
TEC CORPORATION
M-PEH-1-905

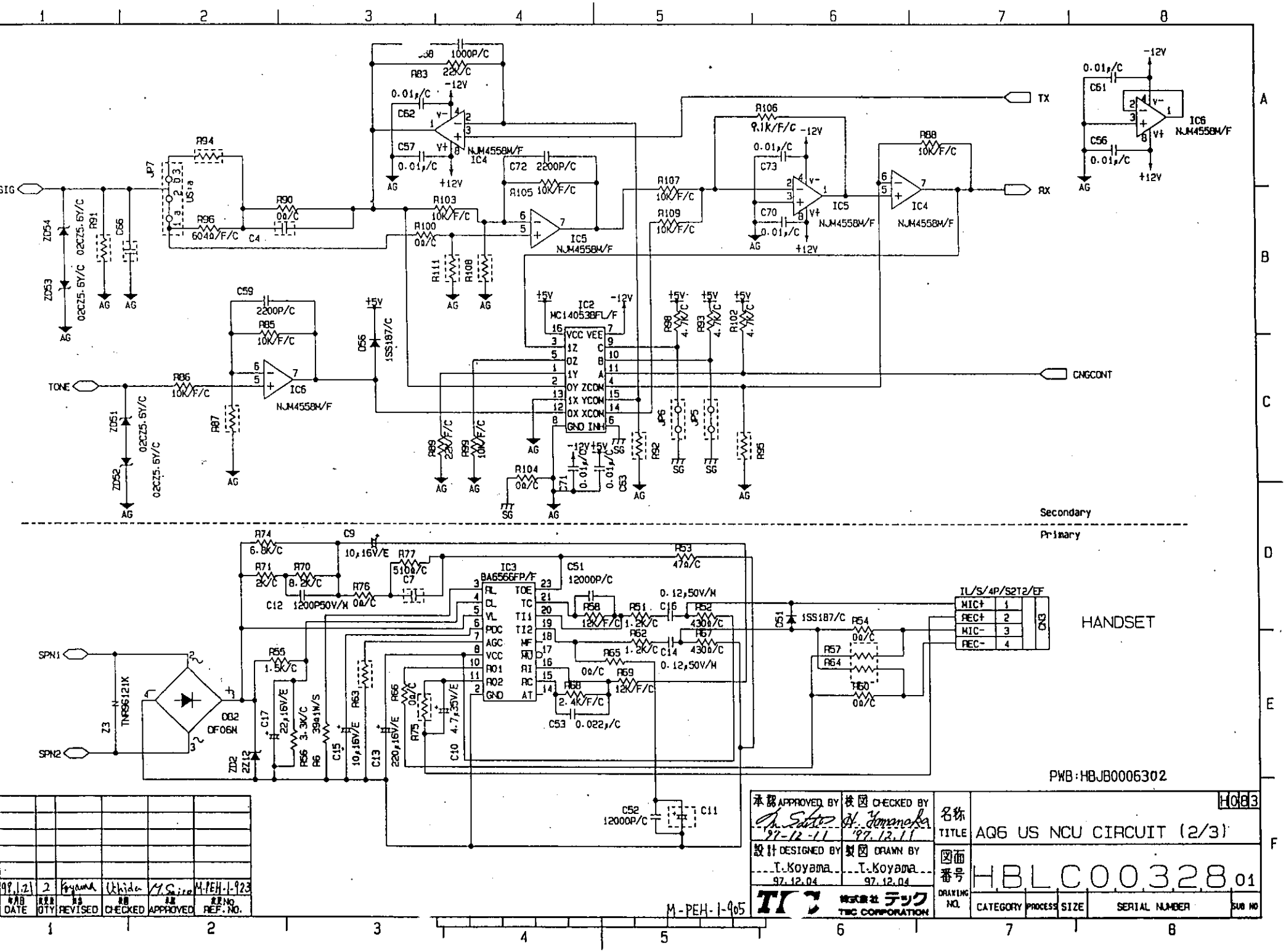

98.1.21	2	Kiyama	Uchida	M.Saito	M-PEH-1-923
年月日 DATE	数量 QTY	変更点 REVISED	検図 CHECKED	承認 APPROVED	変更NO. REF. NO.

M-PEH-1-905

承認 APPROVED BY: M. Saito 97-12-11	検図 CHECKED BY: H. Yamanaka 97.12.11	名称 TITLE	AQ6 US NCU CIRCUIT (2/3)
設計 DESIGNED BY: T.Koyama 97.12.04	製図 DRAWN BY: T.Koyama 97.12.04	図面番号 DRAWING NO.	HBLC00328 01

TIC 株式会社 テック TIC CORPORATION

CATEGORY	PROCESS	SIZE	SERIAL NUMBER	SUB NO

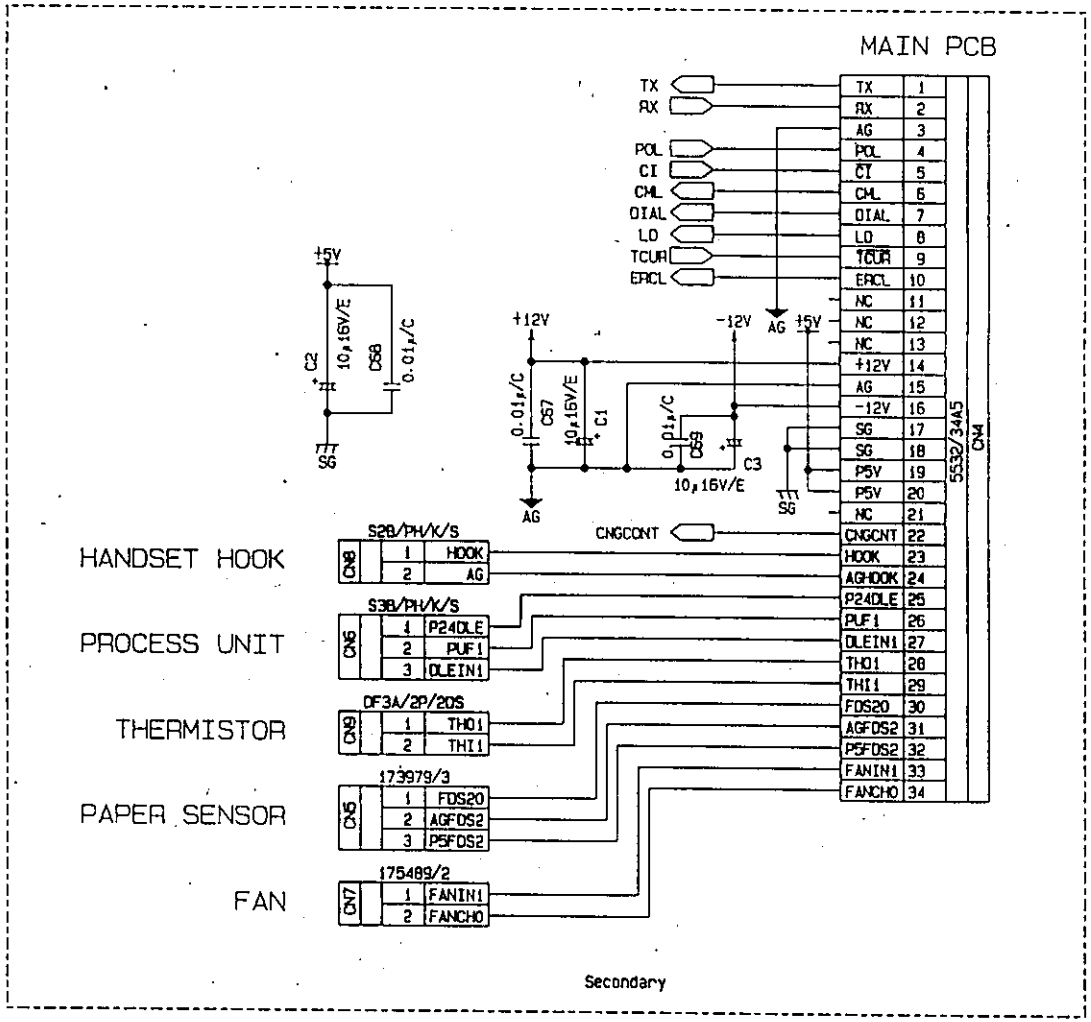

PWB:HBJB0006302

8.12	1	Koyama	Uchida	M.Saito	M-PEH-1-923
DATE	QTY	REVISED	CHECKED	APPROVED	REF. NO.

M-PEH-1-905

承認 APPROVED BY M.Saito 97-12-11	検図 CHECKED BY H.Yamanaka 97.12.11	名称 TITLE	H083 AQ6 US NCU CIRCUIT (3/3)
設計 DESIGN BY T.Koyama 97.12.04	製図 DRAWN BY T.Koyama 97.12.04	図面番号 DRAWING NO.	HBLC00328 01
TEC 株式会社 テック TEC CORPORATION			CATEGORY / PROCESS / SIZE / SERIAL NUMBER / SUB NO

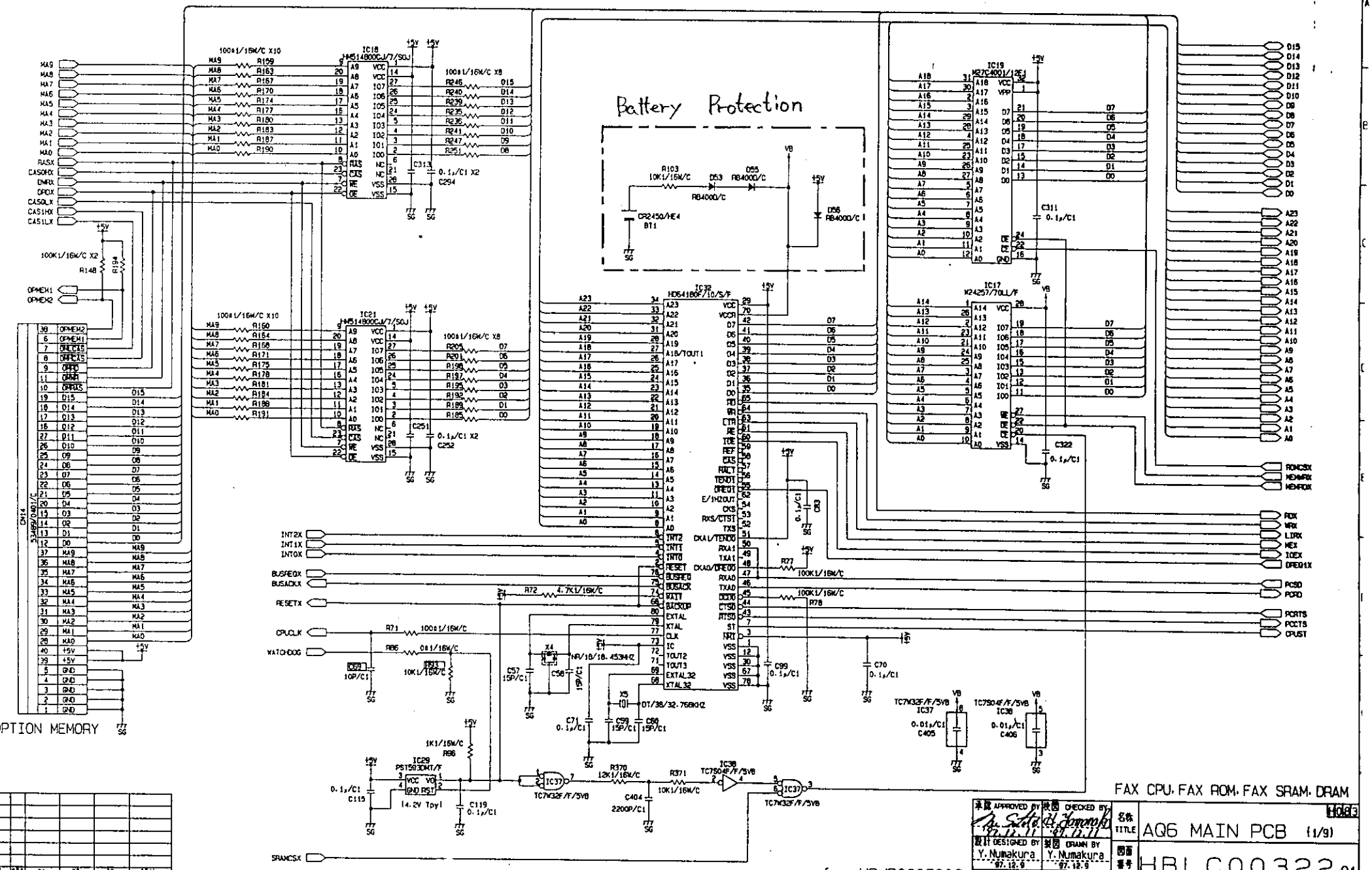
Battery Protection
IC18 HM514800CJ/7/50J
IC21 HM514800CJ/7/50J
IC19 M27C400J/12F1
IC17 W24257/70LL/F
IC32 HD64180F/10/S/F
IC29 PST593DKT/F
IC37 TC7W32F/F/5VB
IC38 TC7S04F/F/5VB
CN14 53499/0407/C
OPTION MEMORY
X4 NR/18/18.4534KZ
X5 DT/38/32.768KHZ
BT1 CR2450/HE4
D53 RB400D/C
D55 RB400D/C
D56 RB400D/C
R103 10K1/16W/C
R148 100K1/16W/C X2
R194
R77 100K1/16W/C
R78 100K1/16W/C
R72 4.7K1/16W/C
R71 100Ω1/16W/C
R86 0Ω1/16W/C
R93 10K1/16W/C
R96 1K1/16W/C
R370 12K1/16W/C
R371 10K1/16W/C
C57 15P/C1
C58 15P/C1
C59 15P/C1
C60 15P/C1
C71 0.1μ/C1
C99 0.1μ/C1
C70 0.1μ/C1
C311 0.1μ/C1
C322 0.1μ/C1
C313 0.1μ/C1 X2
C294
C251 0.1μ/C1 X2
C252
C115 0.1μ/C1
C119 0.1μ/C1
C404 2200P/C1
C405 0.01μ/C1
C406 0.01μ/C1
C69 10P/C1
14.2V Typ1
INT2X
INT1X
INTOX
BUSREQX
BUSACKX
RESETX
CPUCLK
WATCHDOG
SRAMCSX
ROMCSX
MEMRDX
MEMWRX
RDX
WRX
LIRDX
MEX
IOEX
DREQ1X
PCSD
PCRD
PCRTS
PCCTS
CPUST
FAX CPU, FAX ROM, FAX SRAM, DRAM
AQ6 MAIN PCB (1/9)
HBLC00322 01
HBJB0006002
TEC
Y. Numakura
97.12.9

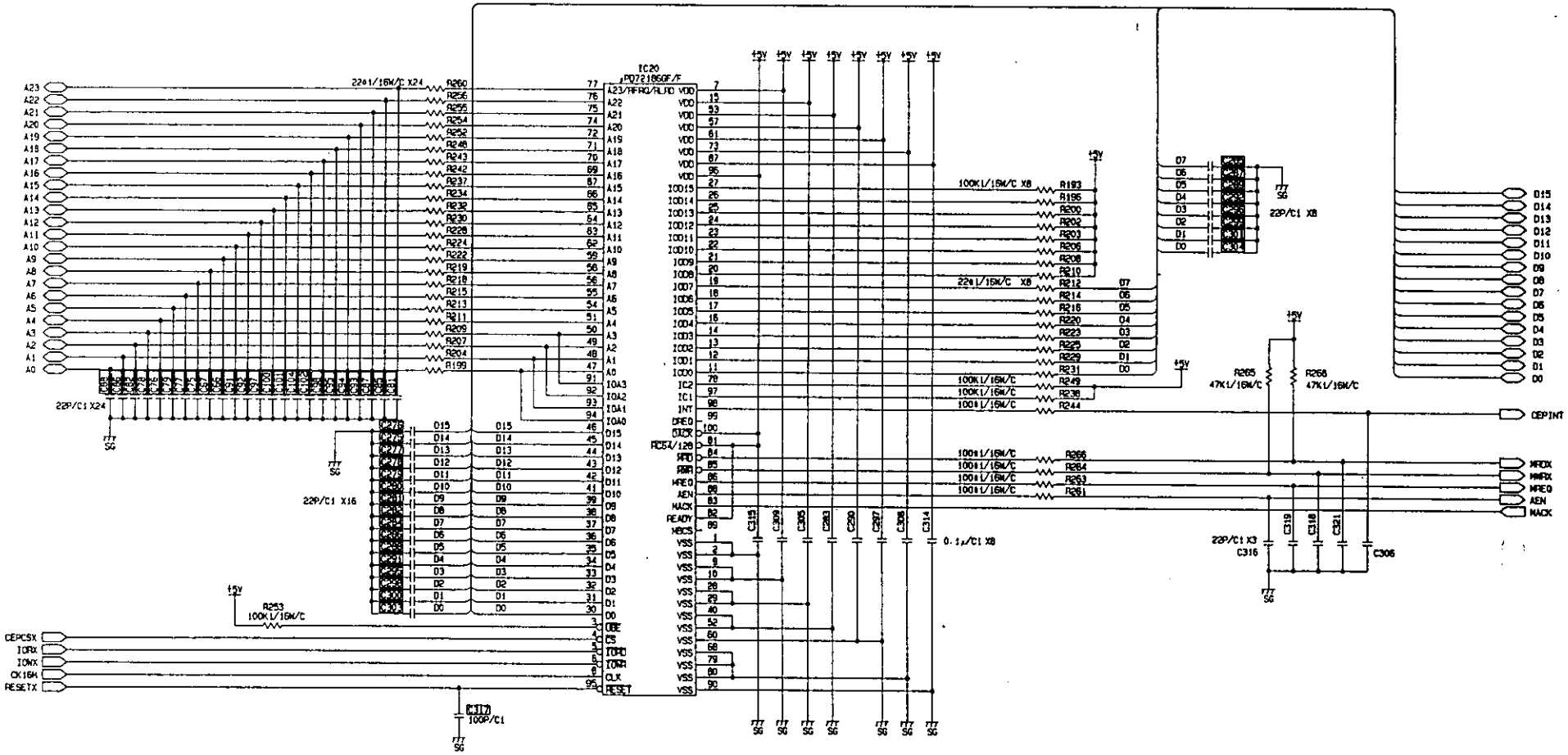
IC20
μPD72186GF/F
A23/MFRQ/RLID
VDD
IOD15
IOD14
IOD13
IOD12
IOD11
IOD10
IOD9
IOD8
IOD7
IOD6
IOD5
IOD4
IOD3
IOD2
IOD1
IOD0
IC2
IC1
INT
DREQ
DACK
RC54/128
MFD
MFR
MREQ
AEN
MACK
READY
MBCS
VSS
OBE
CS
IOWD
IORD
CLK
RESET
IOA3
IOA2
IOA1
IOA0
A23
A22
A21
A20
A19
A18
A17
A16
A15
A14
A13
A12
A11
A10
A9
A8
A7
A6
A5
A4
A3
A2
A1
A0
D15
D14
D13
D12
D11
D10
D9
D8
D7
D6
D5
D4
D3
D2
D1
D0
CEPCSX
IOFX
IOWX
CK16M
RESETX
CEPINT
MFDX
MMFX
MREQ
AEN
MACK
+5V
SG
22P/C1 X24
22P/C1 X16
22P/C1 X8
0.1μ/C1 X8
22P/C1 X3
100P/C1
C317
C315
C309
C305
C303
C299
C297
C308
C314
C319
C318
C321
C316
C306
R253
100K1/16W/C
R265
47K1/16W/C
R268
47K1/16W/C
100K1/16W/C X8
22K1/16W/C X8
100Ω1/16W/C

CODEC IC

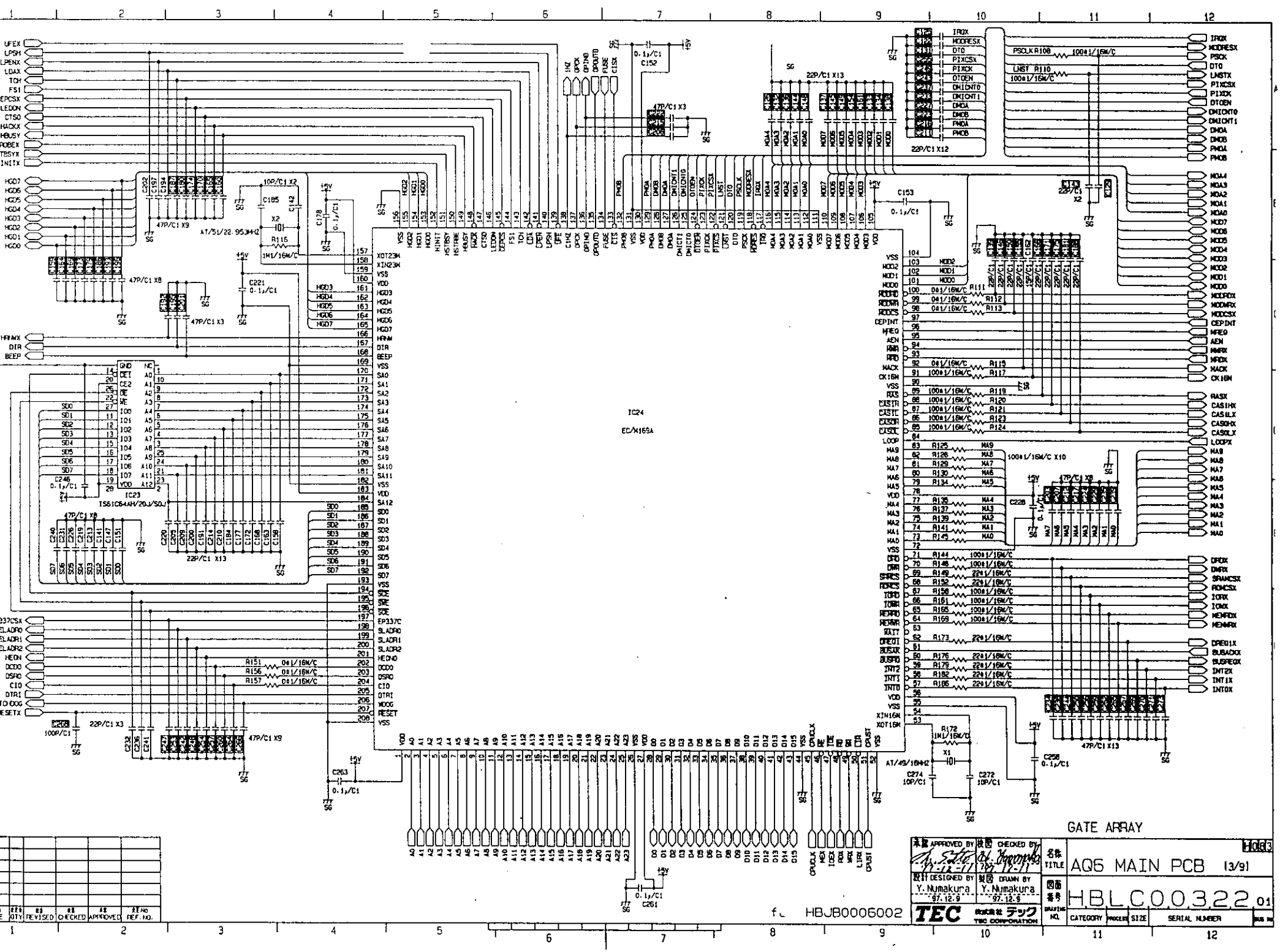
IC24
EC/X169A
IC23
IS61C64AH/20J/SOJ
A7/51/22.9536HZ
A7/49/16HZ
GATE ARRAY
HBJB0006002
TEC
TEC CORPORATION
APPROVED BY
CHECKED BY
DESIGNED BY
Y. Numakura
97.12.9
DRAWN BY
Y. Numakura
97.12.9
TITLE
AQ6 MAIN PCB (3/9)
DRAWING NO.
HBLC00322 01
CATEGORY
PROCESS
SIZE
SERIAL NUMBER
REVISED
CHECKED
APPROVED
REF. NO.

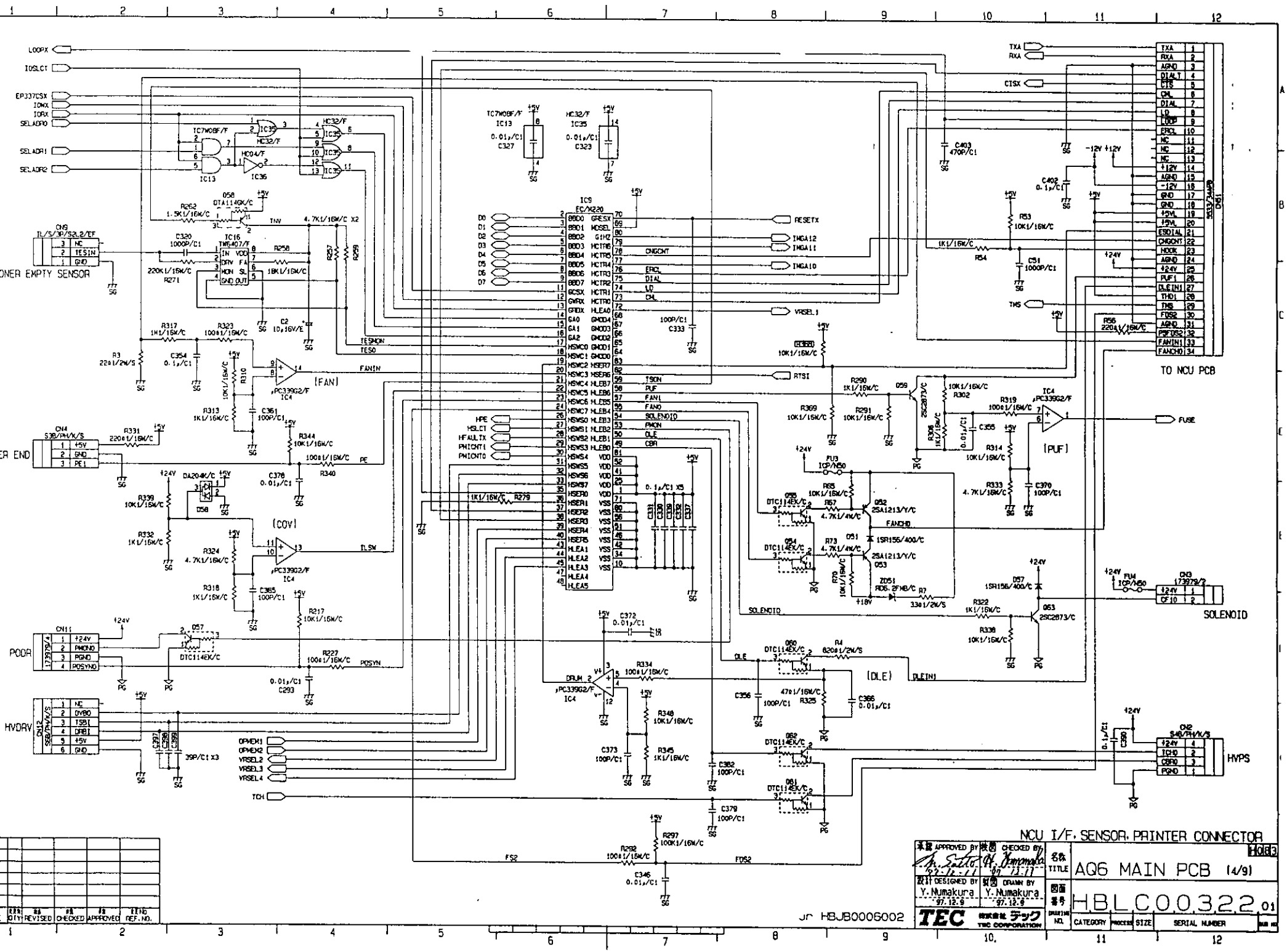
LOOPX
IOSLCT
EP337CSX
IOWX
IORX
SELADR0
SELADR1
SELADR2
IC9
EC/X220
RESETX
IMGA12
IMGA11
IMGA10
VRSEL1
RTSI
FUSE
TO NCU PCB
SOLENOID
HVPS
HVDRV
PODR
TONER EMPTY SENSOR
(FAN)
(COV)
(PUF)
(DLE)
NCU I/F, SENSOR, PRINTER CONNECTOR
AQ6 MAIN PCB (4/9)
HBLC00322 01
HBJB0006002
TEC
TEC CORPORATION

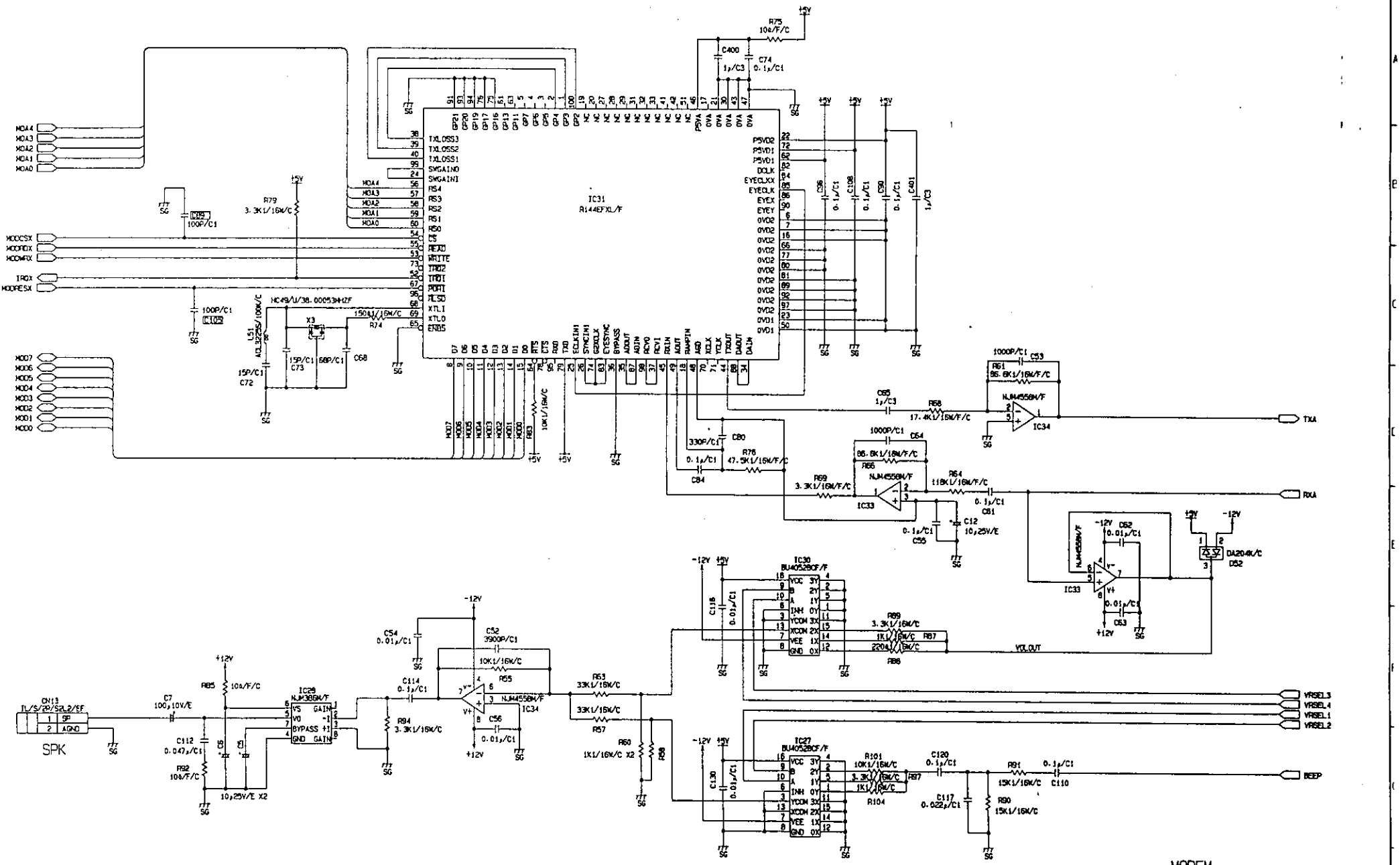

本図 APPROVED BY	検図 CHECKED BY	名称 TITLE	AQ6 MAIN PCB (5/9)		H083
設計 DESIGNED BY Y.Numakura 97.12.9	製図 DRAWN BY Y.Numakura 97.12.9	図面番号 DRAWING NO.	HBLC00322 01		
TEC 株式会社 テック TWO CORPORATION		CATEGORY	PROCESS	SIZE	SERIAL NUMBER

f HBJB0005002

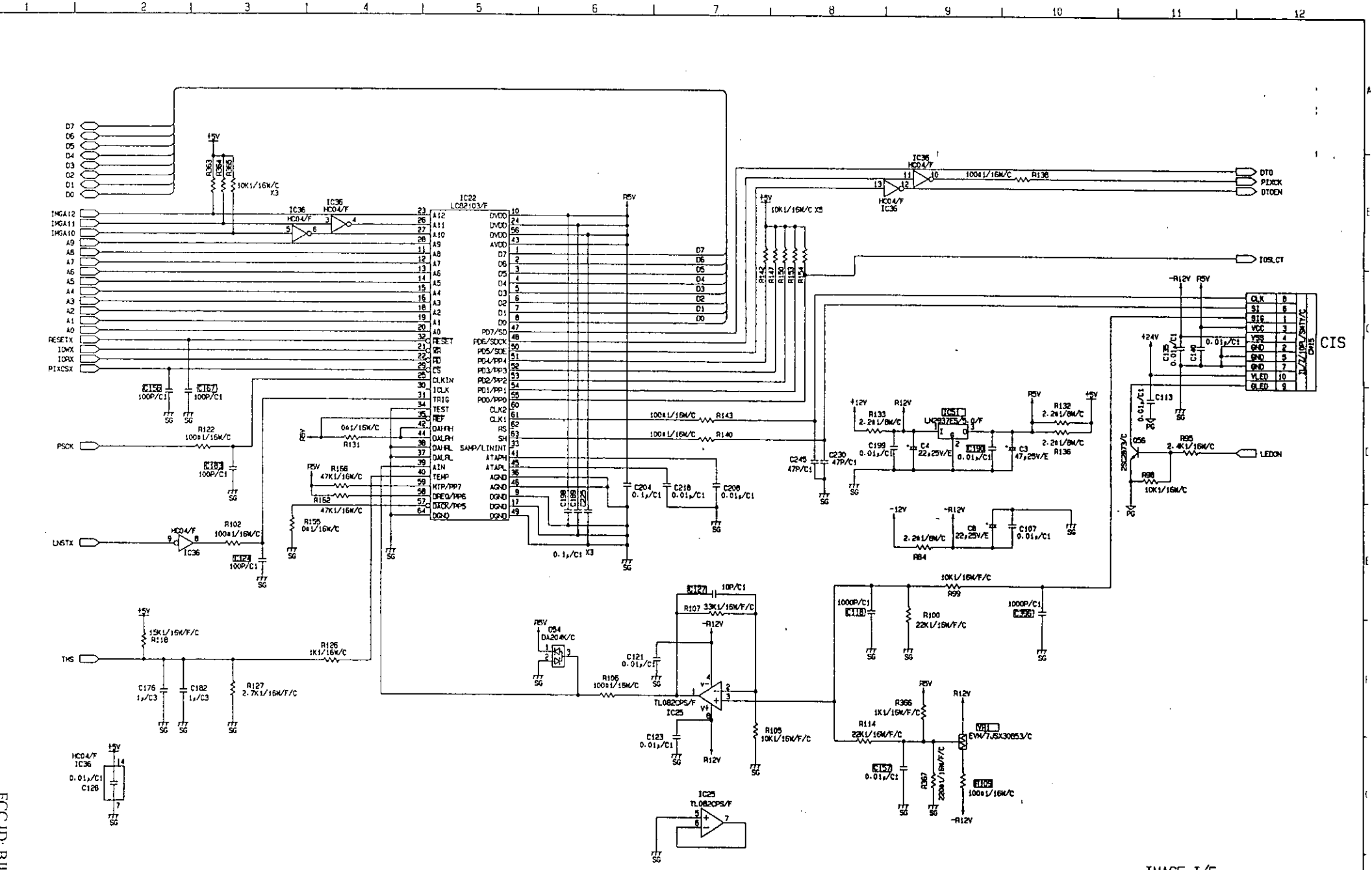

IMAGE I/F

本図 APPROVED BY	検図 CHECKED BY	名称 TITLE	AQ6 MAIN PCB (6/9)
設計 DESIGNED BY Y. Numakura '97.12.9	製図 DRAWN BY Y. Numakura '97.12.9	図面番号 DRAWING NO.	HBLC00322 01
TEC TEC CORPORATION		CATEGORY / PROCESS / SIZE / SERIAL NUMBER	

f: HBJB0006002

ECC ID: BJOH 98001

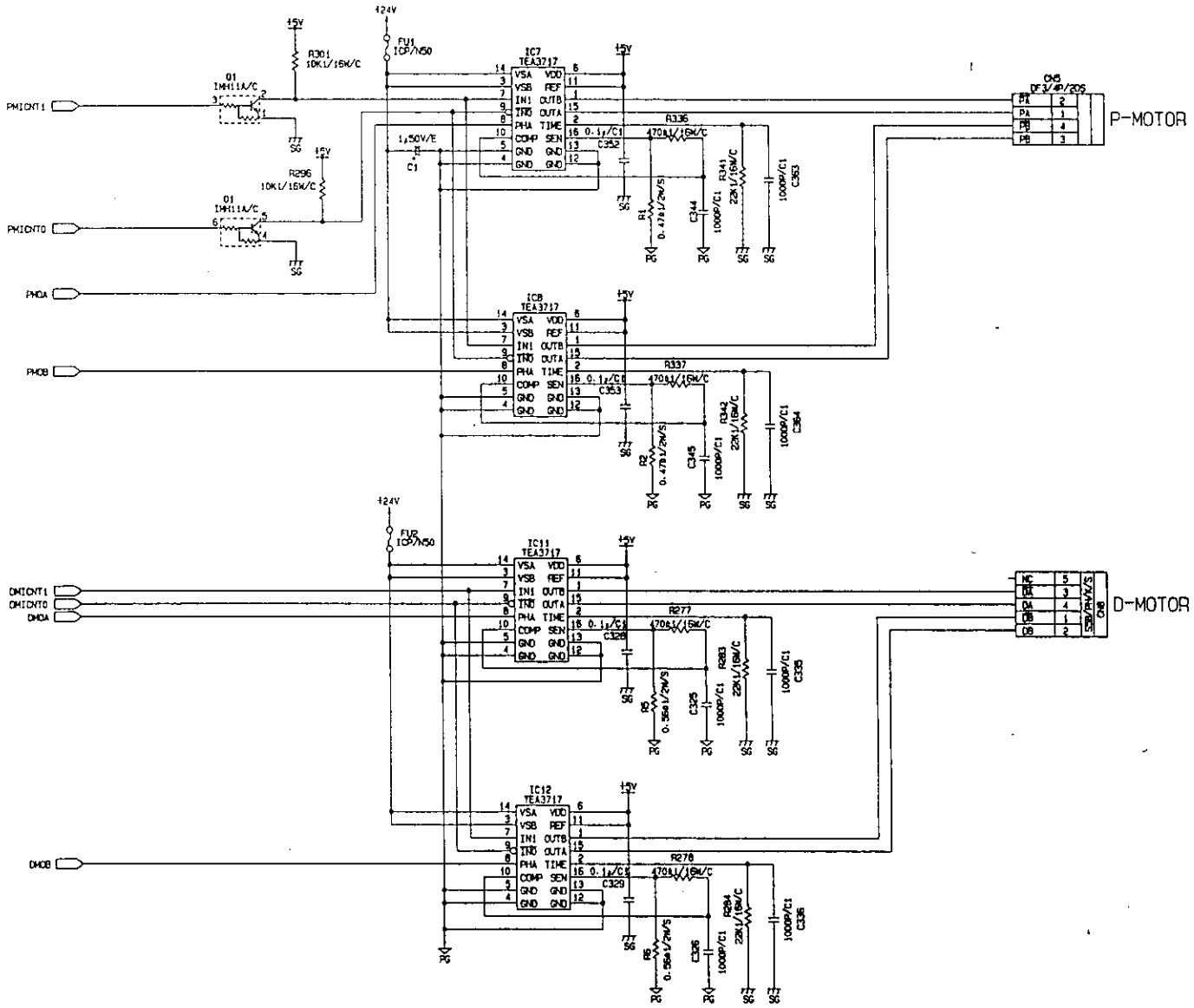

MOTOR DRIVER

本図 APPROVED BY	検図 CHECKED BY	名称 TITLE	AQ6 MAIN PCB (7/9)		H083
設計 DESIGNED BY Y.Numakura 97.12.6	製図 DRAWN BY Y.Numakura 97.12.6	図面番号 DRAWING NO.	HBLC00322		01
TEC 株式会社 テック TEC CORPORATION			CATEGORY	PROCESS	SIZE	SERIAL NUMBER	SUB NO.

f. HBJB0005002

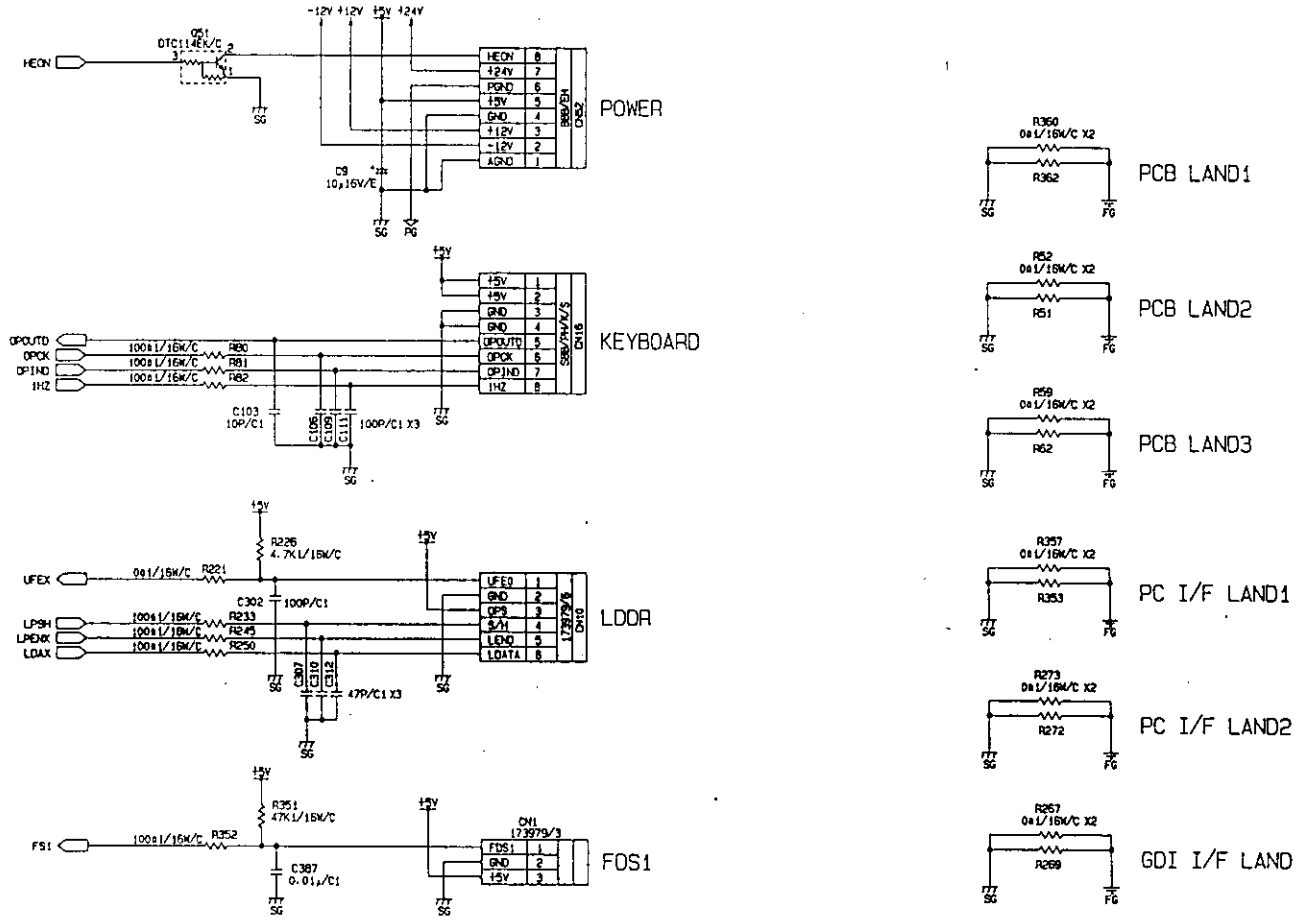

REV.	NO.	REVISED	CHECKED	APPROVED	REF. NO.

f HBJB0006002

本図 APPROVED BY	検図 CHECKED BY	名称 TITLE	AQ6 MAIN PCB (8/9)
設計 DESIGNED BY Y. Numakura 97.12.9	製図 DRAWN BY Y. Numakura 97.12.9	図面番号 DRAWING NO.	HBLC00322 01
TEC 東京電子工業株式会社 TEC CORPORATION		CATEGORY / PROCESS / SIZE	SERIAL NUMBER

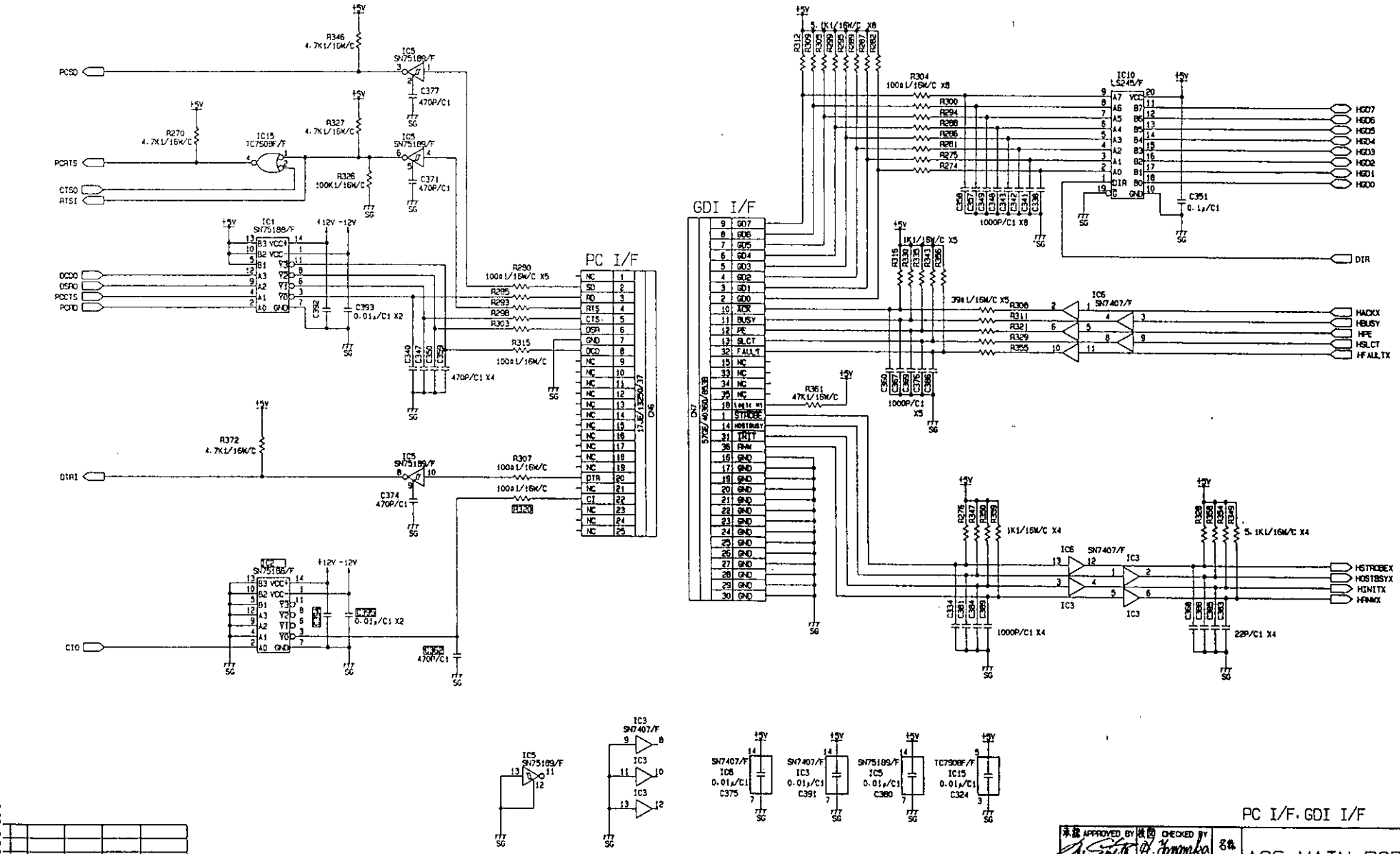

承認 APPROVED BY	検図 CHECKED BY	名称 TITLE	AQ6 MAIN PCB (9/9)	
設計 DESIGNED BY Y. Numakura 97.12.9	製図 DRAWN BY Y. Numakura 97.12.9	図面番号 DRAWING NO.	HBLC00322 01	
TEC 株式会社 テック TEC CORPORATION		CATEGORY	PROCESS / SIZE	SERIAL NUMBER

PC I/F. GDI I/F

f. HBJB0006002

REV. QTY	REVISED	CHECKED	APPROVED	REV. NO. REF. NO.

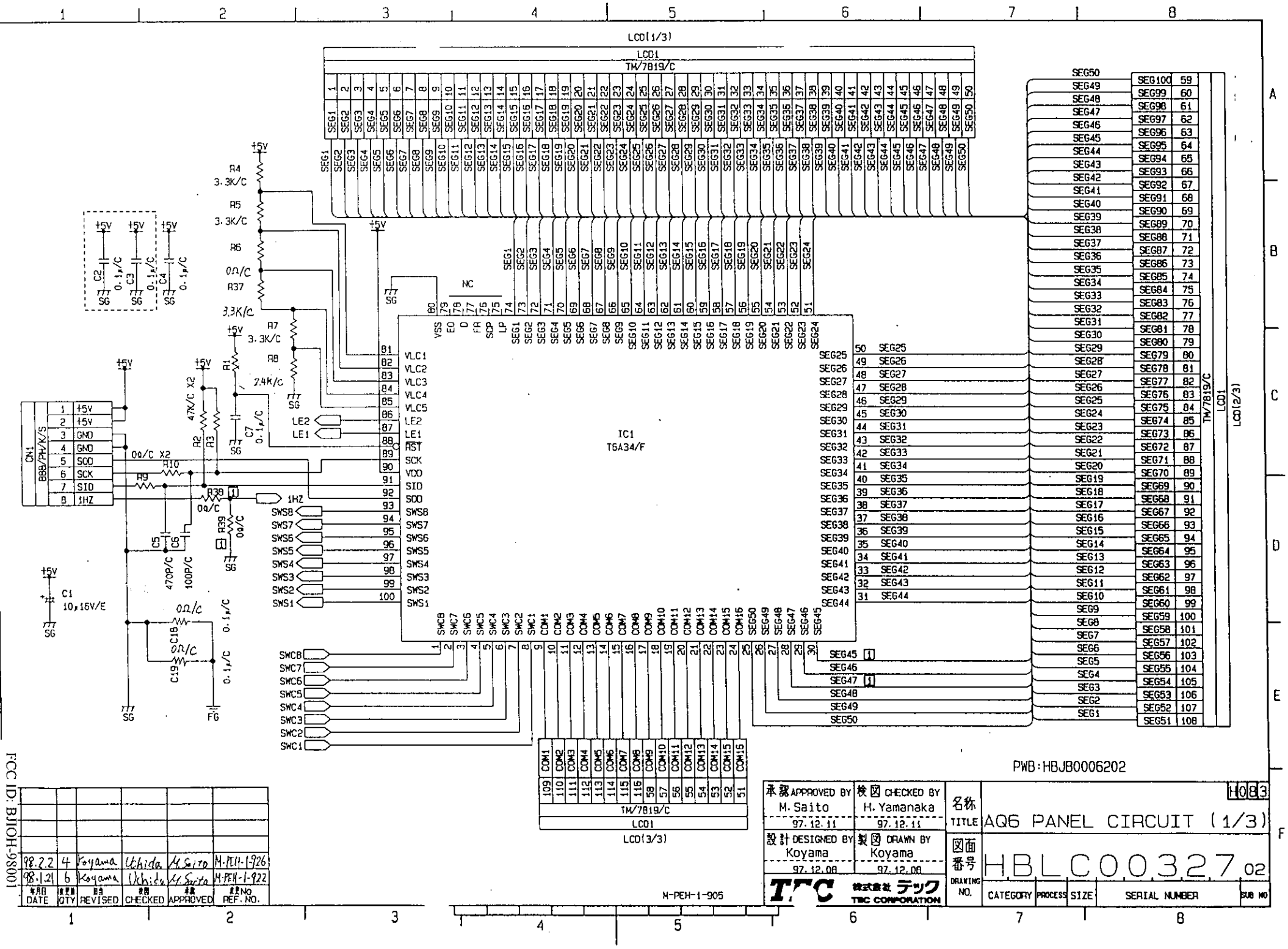
LCD(1/3)
LCD1
TM7819/C
IC1
T6A34/F
CN1
B8B-PH-K-S
LCD(2/3)
LCD(3/3)
PWB:HBJB0006202
FCC ID: BJIOH-98001
承認 APPROVED BY M. Saito 97.12.11
検図 CHECKED BY H. Yamanaka 97.12.11
設計 DESIGNED BY Koyama 97.12.08
製図 DRAWN BY Koyama 97.12.08
名称 TITLE AQ6 PANEL CIRCUIT (1/3)
図面番号 DRAWING NO. HBLC0327 02
H083
CATEGORY PROCESS SIZE SERIAL NUMBER SUB NO
TFC 株式会社テック TEC CORPORATION
M-PEH-1-905
DATE QTY REVISED CHECKED APPROVED REF. NO.
98.2.2 4 Koyama Uchida M.Saito M-PEH-1-926
98.1.21 6 Koyama Uchida M.Saito M-PEH-1-922

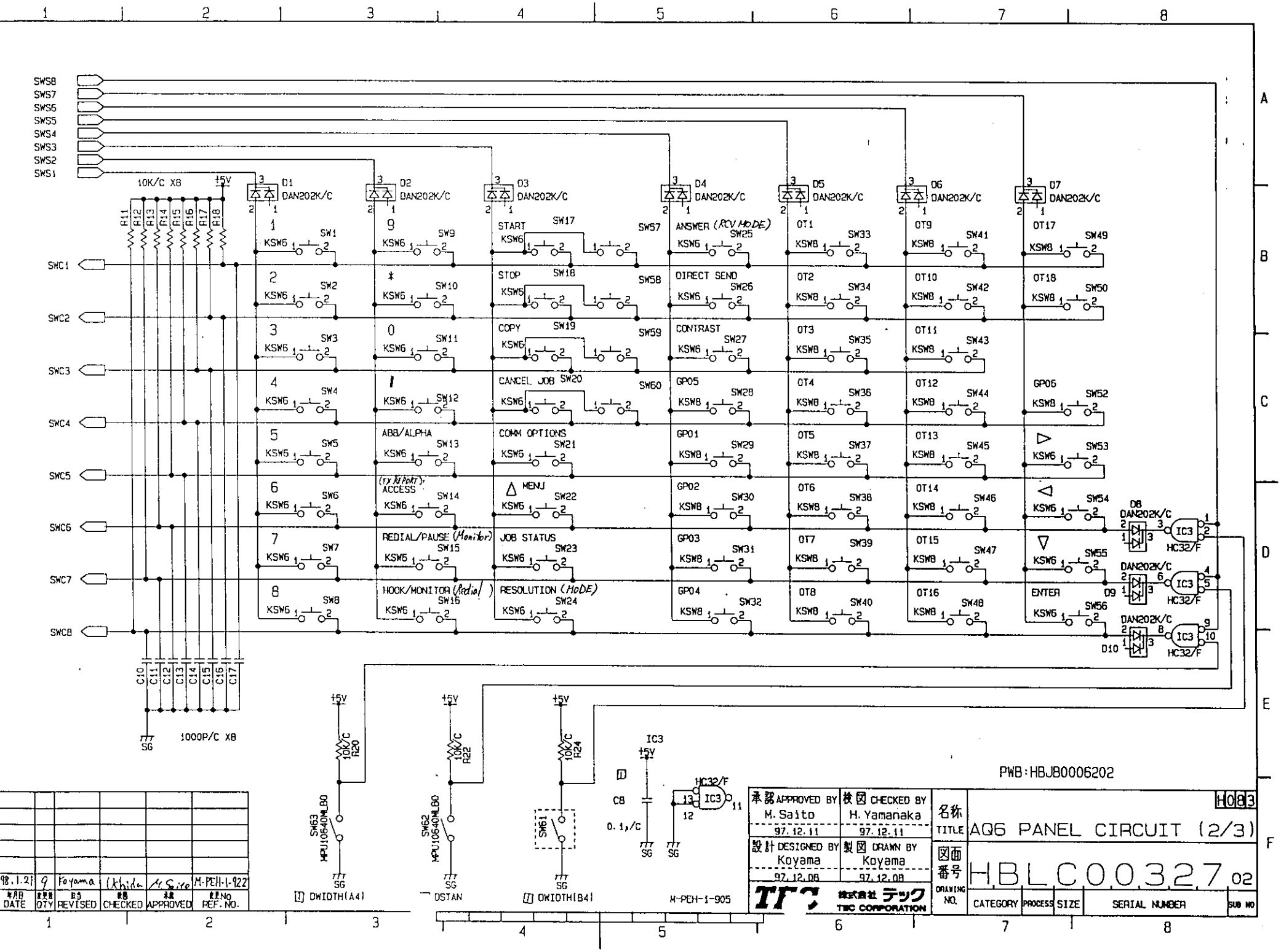

98.1.21	9	Koyama	Ichida	Y. Saito	M-PEH-1-922
年月日 DATE	数量 QTY	改訂 REVISED	検図 CHECKED	承認 APPROVED	図番No. REF. NO.

承認 APPROVED BY M. Saito 97.12.11	検図 CHECKED BY H. Yamanaka 97.12.11	名称 TITLE AQ6 PANEL CIRCUIT (2/3)
設計 DESIGNED BY Koyama 97.12.08	製図 DRAWN BY Koyama 97.12.08	図面番号 DRAWING NO. HBLC00327 02

TTC 株式会社 テック TTC CORPORATION

H083

CATEGORY	PROCESS	SIZE	SERIAL NUMBER	SUB NO

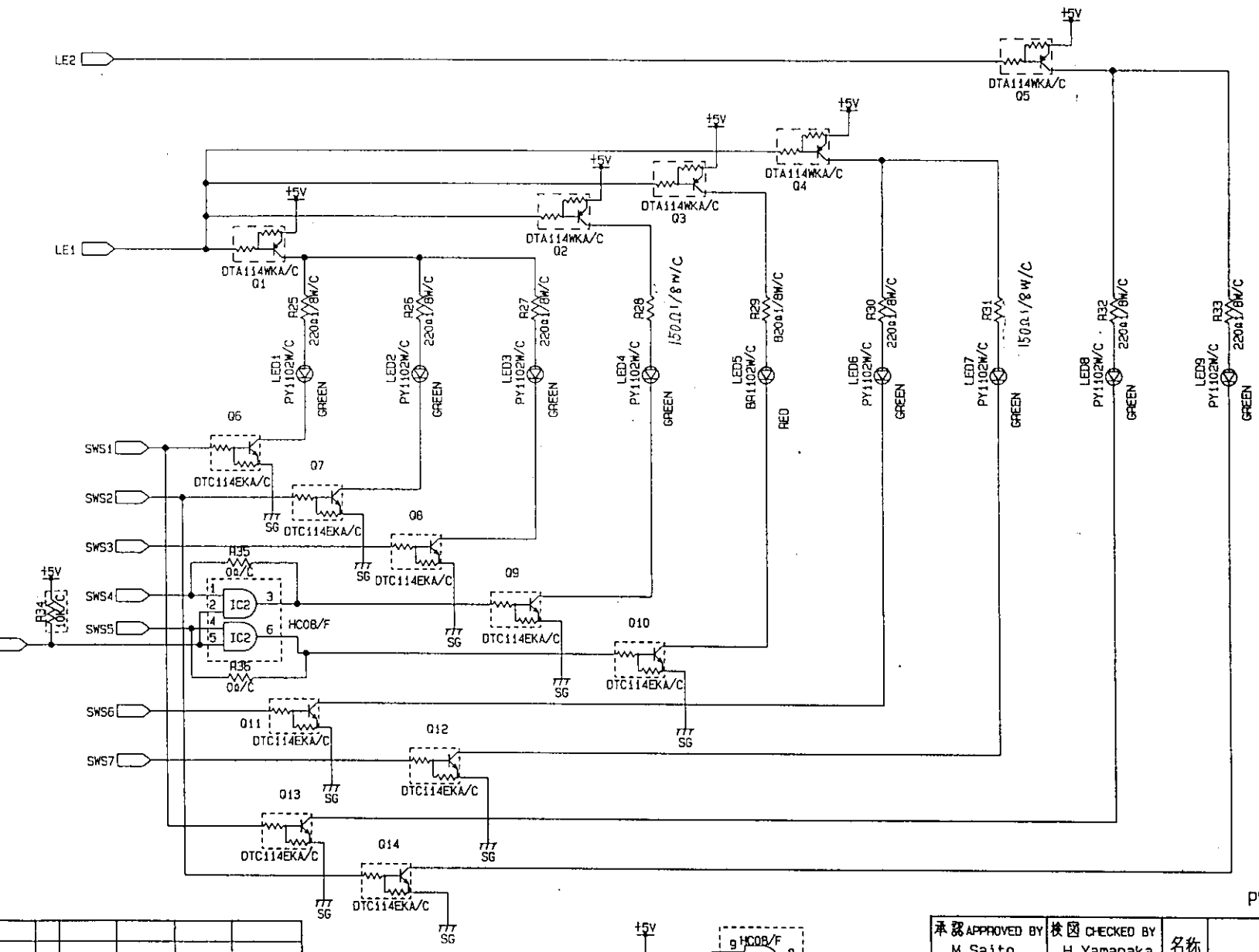

	LE1	LE2
SWS1	LED1 *1	LED8 DARKEN
SWS2	LED2 *2	LED9 LIGHTEN
SWS3	LED3 S-FINE	
SWS4	LED4 BUSY	
SWS5	LED5 ERROR	
SWS6	LED6 AUTO	
SWS7	LED7 ON-LINE	

*1 : TOSHIBA: HALFTONE
XEROX : FINE

*2 : TOSHIBA: FINE
XEROX : PHOTO

PWB:HBJB0006202

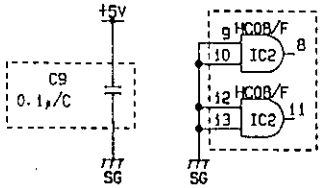

年月日 DATE	改訂番 QTY	改訂 REVISED	検図 CHECKED	承認 APPROVED	変更No. REF. NO.
8.2.2	2	Koyama	Uchida	M.Sato	M-PEH-1-926
8.1.21	4	Koyama	Uchida	M.Saito	M-PEH-1-922

M-PEH-1-905

承認 APPROVED BY	検図 CHECKED BY
M. Saito	H. Yamanaka
97.12.11	97.12.11
設計 DESIGNED BY	製図 DRAWN BY
Koyama	Koyama
97.12.08	97.12.08

TBC 株式会社 テック TBC CORPORATION

名称 TITLE: AQ6 PANEL CIRCUIT (3/3)

図面番号 DRAWING NO.: HBLC00327 02

CATEGORY	PROCESS	SIZE	SERIAL NUMBER	SUB NO

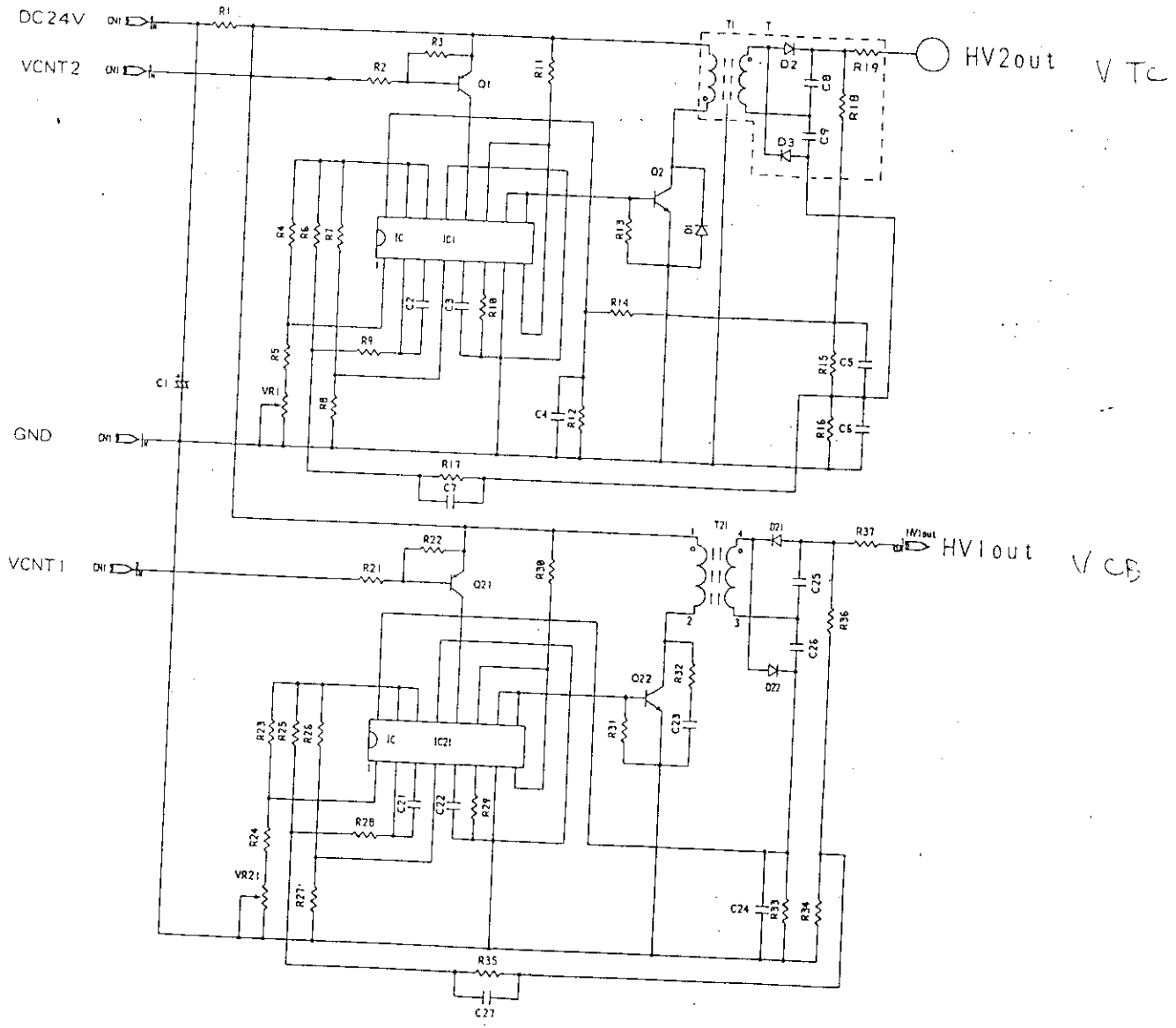

出図
'94.10.31
リコー計器(株)
設計課

年月日	変更記事／作成年月日 94・10・11	変更者

指定以外ノ寸法ニ対スル寸法差 (±)							
呼び寸法 ＼ 等級	0級	1級	2級	3級	4級	5級	指定等級
4以下	0.05	0.1	0.1	0.1	0.2	0.5	
4ヲコエ 16マデ	0.05	0.1	0.1	0.2	0.3	0.8	
16ヲコエ 63マデ	0.05	0.1	0.2	0.3	0.5	1.2	
63ヲコエ 250マデ	0.1	0.2	0.3	0.5	0.8	1.9	角
250ヲコエ1000マデ		0.3	0.5	0.8	1.2	3.0	度
1000ヲコエ2000マデ			0.8	1.2	1.8	5.0	

名称	回路図：K569 HVPS			
作図	一	設計	古賀	古賀
部番	3E541098			