TEST REPORT
No.: 2-20795542b/11

According to:
FCC Regulations
FCC Part 22H/24E
FCC Part 15.207C
FCC Part 15.209C
&
IC Regulations
RSS-132, Issue 2
RSS-133, Issue 5
RSS-Gen, Issue 2

for

Cinterion Wireless Modules GmbH

Quad-Band GSM/GPRS Module BGS2-W
FCC-ID: QIPBGS2
IC: 7830A-BGS2

Laboratory Accreditation and Listings			
D-PL-12047-01-01	MRA US-EU 0003	Industry Canada Reg. No.: 3462D-1 3462D-2	Reg. No.: R-2665, R-2666 C-2914, T-1967 G-301
CTIA Authorized Test Lab LAB CODE 20011130-00		WiFi ALLIANCE AUTHORIZED RF LABORATORY	
accredited according to DIN EN ISO/IEC 17025			

CETECOM GmbH
Laboratory Radio Communications & Electromagnetic Compatibility
Im Teelbruch 116 • 45219 Essen • Germany
Registered in Essen, Germany, Reg. No.: HRB Essen 8984
Tel.: + 49 (0) 20 54 / 95 19-954 • Fax: + 49 (0) 20 54 / 95 19-964
E-mail: info@cetecom.com • Internet: www.cetecom.com

The test results relate only to the individual items which have been tested. This report shall not be reproduced in parts without the written approval of the testing laboratory © Copyright: All rights reserved by CETECOM

Table of contents

1. SUMMARY OF TEST RESULTS....3

1.1. TESTS OVERVIEW FCC Part 15/22/24 and Kanada IC Standards (RSS) 3

2. ADMINISTRATIVE DATA 5

2.1. Identification of the testing laboratory....5
2.2. Test location 5
2.3. Organizational items....5
2.4. Applicant's details 5
2.5. Manufacturer's details 5

3. EQUIPMENT UNDER TEST (EUT)....6

3.1. Additional declaration and description of main EUT 6
3.2. Configuration of cables used for testing 6
3.3. EUT: Type, S/N etc. and short descriptions used in this test report 7
3.4. Auxiliary Equipment (AE): Type, S/N etc. and short descriptions....7
3.5. EUT set-ups 8
3.6. EUT operating modes 8
3.7. Parameter Settings on mobile phone and base station CMU200 9

4. DESCRIPTION OF TEST SET-UP'S....10

4.1. Test Set-up for conducted measurements 10
4.2. Test set-up for radiated measurements 12

5. MEASUREMENTS 13

5.1. RF power output (Conducted and Radiated) 13
5.2. Occupied bandwidth 17
5.3. Radiated emissions, below 30 MHz, §15.205 and §15.209C, RSS210, RSS310, RSS-gen 19
5.4. Emission limits (Spurious emission conducted/radiated) 21
5.5. Frequency stability on temperature and voltage variations....27
5.6. Conducted emissions on AC-Power lines....32

6. CALIBRATION METHOD OF ANECHOIC CHAMBER....34

7. MEASUREMENT UNCERTAINTIES....35

8. INSTRUMENTS AND ANCILLARY....36

8.1. Used equipment "CTC"....36

9. ANNEX – CORRECTION FACTORS DUE TO REDUCED MEAS. DISTANCE (F< 30 MHZ)....40

Table of annex

	Total pages
SEPARATE DOCUMENT 2_20795542C_10_A1.PDF: DIAGRAMS OF TESTING	86
SEPARATE DOCUMENT 2_20795542C_10_A2.PDF: PHOTOS OF EUT	9
SEPARATE DOCUMENT 2_20795542C_10_A3.PDF: PHOTOS OF SET-UP	4

1. Summary of test results

The presented GSM 850/900/1800/1900 Module can be build inside host applications and extends their capability by wireless GSM technology. Data transmissions or voice applications are possible field applications.

In order to verify the compliance with applicable rules, a representative configuration consisting of representative auxiliary equipment was chosen. Embedded in this configuration, the GSM Module can be tested. Pls. refer to set-up description and photos for more details.
Following tests have been performed to show compliance with applicable FCC Part 2, Part 22, Subpart H and Part 24, Subpart E (Broadband PCS) of the FCC CFR 47 Rules and RSS-132, RSS-133 and RSS-Gen.

The test results apply exclusively to the test samples as presented in chapter 3.1. The CETECOM GmbH does not assume responsibility for any conclusions and generalizations taken in conjunction with other specimens or samples of the type of the item presented to tests.

1.1. TESTS OVERVIEW FCC Part 15/22/24 and Kanada IC Standards (RSS)

TEST CASES	PORT	REFERENCES & LIMITS			EUT set-up	EUT opera-ting mode	Result
		FCC Standard	RSS Section	TEST LIMIT			
TX-Mode							
RF POWER (conducted)	Antenna terminal (conducted)	§2.1046	--	N/A	3	1+2	Passed
RF-POWER radiated (ERP/EIRP)	Cabinet	§2.1046 §22.913(a)(2) §24.232(c)	RSS-132: 4.4 SRSP-503: 5.1.3 RSS-133:4.1/6.4 SRSP-510: 5.1.2	< 7 Watt (ERP) < 2 Watt (EIRP)	1	1+2	Passed
SPURIOUS EMISSIONS (conducted)	Antenna terminal (conducted)	§2.1051 §22.917(a)(b) §24.238(a)(b)	RSS-132: 4.5.1 RSS-133: 6.5.1	43+10log(P) dBc	3	1+2	Passed
99% OCCUPIED BANDWIDTH	Antenna terminal (conducted)	§2.202 §2.1049 §22.917(a) §24.238(a)	RSS Gen:4.4.1	99% Power	3	1+2	Passed
SPURIOUS EMISSIONS (radiated)	Cabinet+ Interconnecting cables (radiated)	§15.209(a)	RSS-Gen: 4.11 RSS-210: Table 3 RSS-310: Table 4	2400/F(kHz) µV/m 24000/F(kHz) µV/m 30 µV/m	2	2	Passed
		§2.1053(a) §22.917(a)(b) §24.238(a)(b)	RSS-132: 4.5.1 RSS-133: 6.5.1	43+10log(P) dBc	1	1+2	Passed
FREQUENCY STABILITY	Antenna terminal (conducted)	§22.355, table C-1 §24.235 §2.1055	RSS-132: 4.3 RSS-133: 6.3	< 2.5ppm <0.1 ppm	3	1+2	Passed
AC-Power lines Conducted emissions	AC-mains	§15.207	RSS-Gen, Issue 2, Chapter 7.2.2	FCC §15.207, limits IC: Table 2, Chapter 7.2.2	4	1+2	Passed

RX Mode							
Receiver conducted emissions	Antenna terminal (conducted)	§2.1051 §15.111	RSS-Gen: 6(b) RSS-132: 4.6 RSS-133: 6.7(b)	FCC: < 2nW IC: < 2 nW/4kHz (30<f<1000 MHz) < 5nW/4kHz (f> 1GHz)	Remark 1	Remark 1	Passed Remark 1
AC-Power lines Conducted emissions	AC-power lines	§15.107, class B	RSS-Gen, Issue 2, Chapter 7.2.2	FCC §15.107, class B limits IC: Table 2, Chapter 7.2.2	Remark 1	Remark 1	Passed Remark 1

Remark:

1.) See separate test report 2_20795542c/11 and corresponding annexes for measurements according Part 15, Subpart B.

ATTESTATION:

I declare that all measurements were performed by me or under my supervision and that all measurements have been performed and are correct to my best knowledge and belief to Industry Canada standards. All requirements as shown in above table are met in accordance with enumerated standards.

.....

Dipl.-Ing. W. Richter
Responsible for testsection

CETECOM GmbH
Im Teelbruch 116
45219 Essen
Tel.: + 49 (0) 20 54 / 95 19 - 0
Fax: + 49 (0) 20 54 / 95 19 - 997

.....

Dipl.-Ing. C. Lorenz
Responsible for test report

2. Administrative Data

2.1. Identification of the testing laboratory

Company name:	CETECOM GmbH
Address:	Im Teelbruch 116 45219 Essen - Kettwig Germany
Laboratory accreditations/Listings:	DAkkS-Registration No. D-PL-12047-01-01 MRA US-EU 0003 IC-Registration No. 3462D-1, 3462D-2 VCCI Registration No. R-2665,R-2666,C-2914,T-339
Responsible for testing laboratory:	Dipl.-Ing. W. Richter
Deputies:	Dipl.-Ing. J.Schmitt

2.2. Test location

2.2.1. Test laboratory “CTC”

Company name:	see chapter 2.1. Identification of the testing laboratory

2.3. Organizational items

Order No.:	20795542
Responsible for test report and project leader:	Dipl.-Ing. C. Lorenz
Receipt of EUT:	2011-02-02
Date(s) of test:	2011-02-03 - 2011-02-17
Date of report:	2011-03-02

Version of template: 09.06 _All.Dotm

2.4. Applicant’s details

Applicant’s name:	Cinterion Wireless Modules GmbH
Address:	Siemensdamm 50 13629 Berlin Germany
Contact person:	Mr. Stefan Ludwig

2.5. Manufacturer’s details

Manufacturer’s name:	please see Applicant's details
Address:	please see Applicant's details

3. Equipment under test (EUT)

3.1. Additional declaration and description of main EUT

Main function	GSM/GPRS Quad-Band Module		
Type	BGS2-W		
GSM Frequency range (USA/Canada bands)	GSM 850: 824 – 849MHZ (Uplink), 869-894MHz (Downlink) GSM1900: 1850-1910MHz (Uplink), 1930-1990MHz (Downlink)		
Type of modulation	GMSK		
Number of channels (USA/Canada bands)	GSM 850: 128 – 251, 125 channels GSM1900: 512 – 810, 300 channels		
EMISSION DESIGNATOR(S)	245KGXW		
Antenna Type: External magnet mount antenna for vehicular use	☐ Integrated ☐ External, no RF- connector ☒ External, separate RF-connector	Frequency range: GSM 850: 824 – 894 MHz GSM 1900: 1850-1990 MHz	
Antenna Gain	☒ radiated: Max. 2 dBi gain at GSM1900		
MAX PEAK Output Power: Radiated ERP GSM850 Radiated EIRP GSM1900	 29,01 dBm (Burst PK) 27,60 dBm (Burst PK)		
MAX PEAK Output Power: Conducted GSM 850 Conducted GSM1900	 32,40 dBm (PK) 29,89 dBm (PK)		
FCC-ID	QIPBGS2		
IC	7380A-BGS2		
Installed option	☒ GSM900 and GSM1800 Bands		
Special EMI components	--		
Power supply	Internally supplied and controller by the DSB75 Board for tests: V_{MIN}=3.3V to V_{MAX}=4.5V DSB75 Box was DC supplied with 9V external power supply		
EUT sample type	☐ Production	☒ Pre-Production	☐ Engineering

3.2. Configuration of cables used for testing

Cable number	Item	Type	S/N serial number	HW hardware status	Cable length
Cable 1	RS232	unshielded	CTC	--	1.8m
Cable 2	USB cable	shielded	CTC	--	1.5m

3.3. EUT: Type, S/N etc. and short descriptions used in this test report

Short descrip-tion*)	EUT	Type	S/N serial number	HW hardware status	SW software status
EUT A	Quad-Band GSM/GPRS Module	BGS2-W	IMEI: 004401-08-048446-8	B2.1	00.960
EUT B	Magnetic Mount antenna	MAR-C3G-2F	CTC#1	2dBi Gain	--
EUT C	Handset Votronic	For M20T, MC35T, TC35T, DSB35	401795321130 4	HH-SI-30.3/V2.0/0	--
EUT D	Adapter Board for BGS2-W	Ven_60/80_0035	#1	--	--
EUT E	DSB Board + flat ribbon connection+ Adapter BG2_PH8_Ada_0207	DSB75	0911007 ICM-100012-03	B1.1	--
EUT F	Quad-Band GSM/GPRS Module	BGS2-W	IMEI: 004401-08-048449-2 (WMC0004AD 0a)	B2.1	00.960

*) EUT short description is used to simplify the identification of the EUT in this test report.

3.4. Auxiliary Equipment (AE): Type, S/N etc. and short descriptions

AE short descrip-tion *)	Auxiliary Equipment	Type	S/N serial number	HW hardware status	SW software status
AE 1	Notebook	Dell D610D	CTC PC3	--	Windows XP + Terminal program
AE 2	AC/DC Adapter	FW7238/09	1401	Input: 100V – 240 V AC/50-60Hz/180mA Output: 9V DC/800mA	--

*) AE short description is used to simplify the identification of the auxiliary equipment in this test report.

3.5.EUT set-ups

EUT set-up no.*)	Combination of EUT and AE	Remarks
Set. 1	EUT A + EUT B+ EUT C + EUT D + EUT E + AE1	set-up used for tests: radiated
Set. 2	EUT F + EUT B +EUT C + EUT D + EUT E + AE1	set-up used for tests: radiated
Set. 3	EUT F + EUT B + EUT C + EUT D + EUT E + AE1	set-up used for conducted RF-tests
Set. 4	EUT A + EUT B+ EUT C + EUT D + EUT E + AE1 + AE2	set-up used for tests: conducted according EMI-AC Power line

*) EUT set-up no. is used to simplify the identification of the EUT set-up in this test report.

3.6. EUT operating modes

EUT operating mode no.*)	Description of operating modes	Additional information
op. 1	GSM 850 TCH mode TCH=128/192/251	A communication link is established between the mobile station and the test simulator. The transmitter is operated at its maximum rated output power: 33 dBm (power class 4; power control level 5). The input signal to the receiver is modulated with normal test modulation. The wanted RF input signal level to the receiver of the mobile station is set to a level to provide a stable communication link.
op. 2	GSM 1900 TCH mode TCH=512/661/810	A communication link is established between the mobile station and the test simulator. The transmitter is operated at its maximum rated output power: 30 dBm (power class 1; power control level 0). The input signal to the receiver is modulated with normal test modulation. The wanted RF input signal level to the receiver of the mobile station is set to a level to provide a stable communication link

*) EUT operating mode no. is used to simplify the test report.

3.7. Parameter Settings on mobile phone and base station CMU200

Following settings apply to the MS during the measurements in **GSM/(E)GPRS**-Mode only:

Parameter	Traffic Mode	Idle Mode
Traffic Channels mobile station (EUT)	GSM 850 TCH_{MS}= 128/ 192 /251 GSM 1900 TCH_{MS} = 512 / 681 / 810	--
maximum power level (PCL)	GSM 850: PCL = 5 (2 Watt) GSM 1900: PCL = 0 (1 Watt)	--
Modulation	GSM: GMSK-Modulation Scheme EDGE: 8-PSK Modulation Scheme	--
DTX	off	--
Bitstream	PRBS 2E9-1 (pseudo-random-sequence) – CCITT 0.153	
Timeslot	3	
Hopping	off	
Timeslot (slot mode)	GSM-Mode: single GPRS-Mode: maximum allowed uplink slots no. according MS class	
MS slot class	Class 10	
Maximum data transmission rate, single time slot	GSM: 17,6 kBit/s Slot EDGE: 59,2 kBit/s Slot	
Speech transcoding (Traffic Mode)	Full rate Version 1	
Mode	BCCH and TCH	
BCCH – base station (CMU,CMD)	GSM 850: 182 GSM 1900: 651	
TCH – base station (CMD, CMU)	auto	
Power level TCH – base station (used timeslot level)	- 70 dBm	
Power level BCCH – base station (control channel level)	- 80 dBm	
External attenuation RF/AF-Input/Output	Accord. calibration prior to measurements	
Mobile Country Code	310	310
BS_AG_BLKS_RES	Not applicable	0
Paging reorganisation		Off (0)
Signalling channel		SDCCH
Location Update		Auto
Cell access		Disabled (barred)

Settings for CMU (general)

Repetition	Continuous
Stop condition	None
Display mode	Max./Min
Statistic Count	1000 Bursts
Decoder	Standard

Additional settings on the base stations CMU200 for frequency stability measurements

4. DESCRIPTION OF TEST SET-UP's

4.1. Test Set-up for conducted measurements

The EUT's RF-signal is coupled out by a suitable antenna coupling connector (1). The signal is first 10 dB attenuated (2) before it is 0° divided by a power divider (3). One of the signal path is connected to the communication base station (4), other branch is connected to the spectrum – analyzer (6). The specific attenuation losses for both signal paths/branches are determined prior to the measurement within a set-up calibration. These are then taken into account by correcting the measurement readings on the spectrum-analyzer.

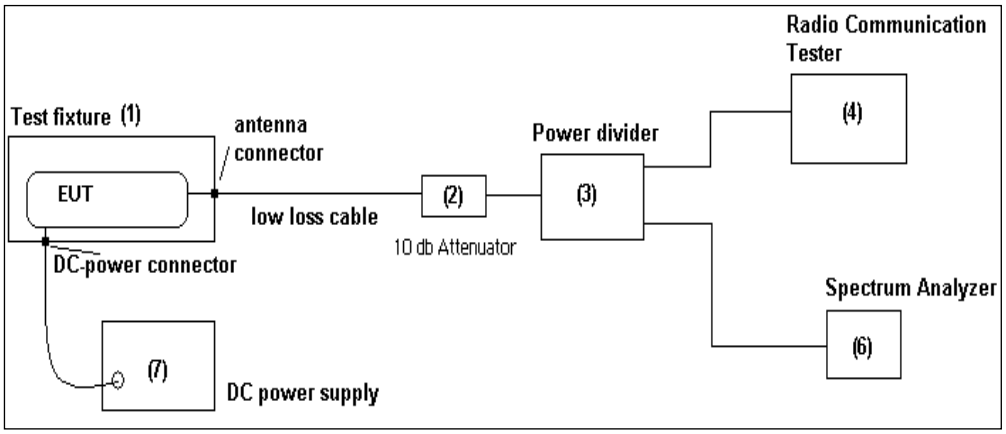

Schematic 1: Test set-up conducted in the Radio Laboratory for occupied bandwidth, frequency stability and spurious emissions measurements.

The EUT's RF-signal is coupled out by a suitable antenna coupling connector (1). The signal is first 6 dB attenuated (2) before it is connected to the co communication base station CMU200 (3). The specific attenuation losses for signal path is determined prior to the measurement within a set-up calibration. These are then taken into account by correcting the measurement readings on the communication base station (3).

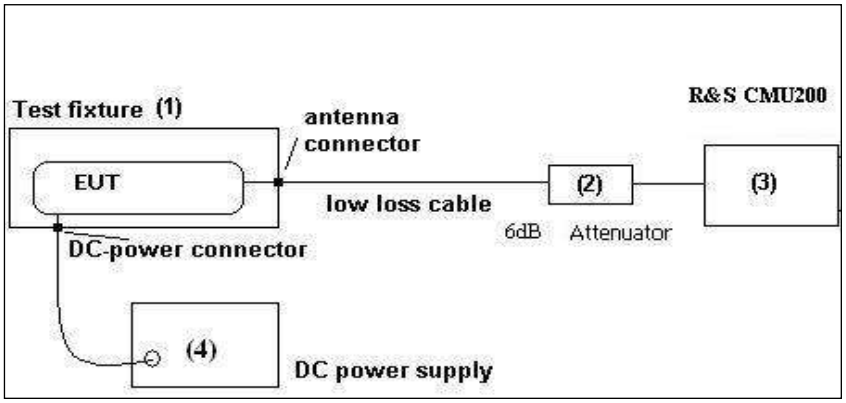

Schematic 2: Test set-up conducted for maximum output power measurements.

Following modified test set-up schematic apply for tests performed inside the climatic chamber:
Frequency stability

In case an external connector is available (test fixture), following set-up is used for measurements.

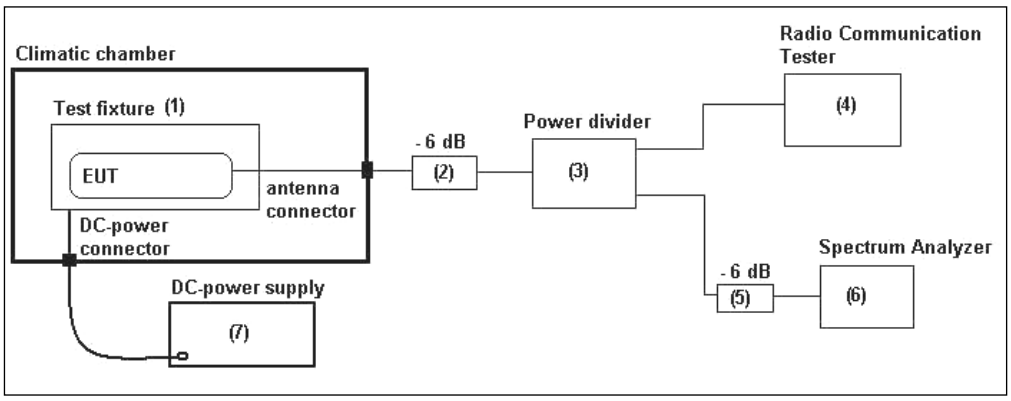

Schematic 3: Test set-up conducted within climatic chamber

4.2. Test set-up for radiated measurements

The radiated emissions from the test device are measured first as exploratory measurement in a FCC recognized semi anechoic chamber (registration no. 99538) or fully anechoic chamber with the dimensions of 8.05m x 6.85m x 5.48m. Very critical frequencies within a defined range, can be re-checked on CETECOM's Open Area Test side, recognized by the FCC to be compliant with ANSI 63.4: 2003 according registration no. 99538

The EUT and accessories are placed on a non-conducting tipping table of 0.8 meter height (semi-anechoic chamber) or 1.55m height (fully-anechoic chamber) which is situated in the middle of the turntable. The turntable can rotate the device under test 360 degree, the tipping table can rotate the device from laid to standing position. This way the device under test can be rotated in all three orthogonal planes in order to maximize the detected emissions. The turn- and tipping table are controlled by a controller unit. All positions manipulations are software controlled from a operator PC.
The measurements are performed for both receiving antenna polarisations: vertical and horizontal.

Up to 18GHz a measurement distance of 3 meters is used, above 18GHz the distance is 1meter. A biconical-logarithmic antenna up to 1 GHz and a horn antenna for frequencies above 1 GHz used. (see equipment list)

The EUT is powered either by a external DC-supply with nominal voltage or a AC/DC power supply as accessory. The communication signalling is performed from outside the chamber with a communication test simulator (CMU200 from Rohde&Schwarz) by airlink.

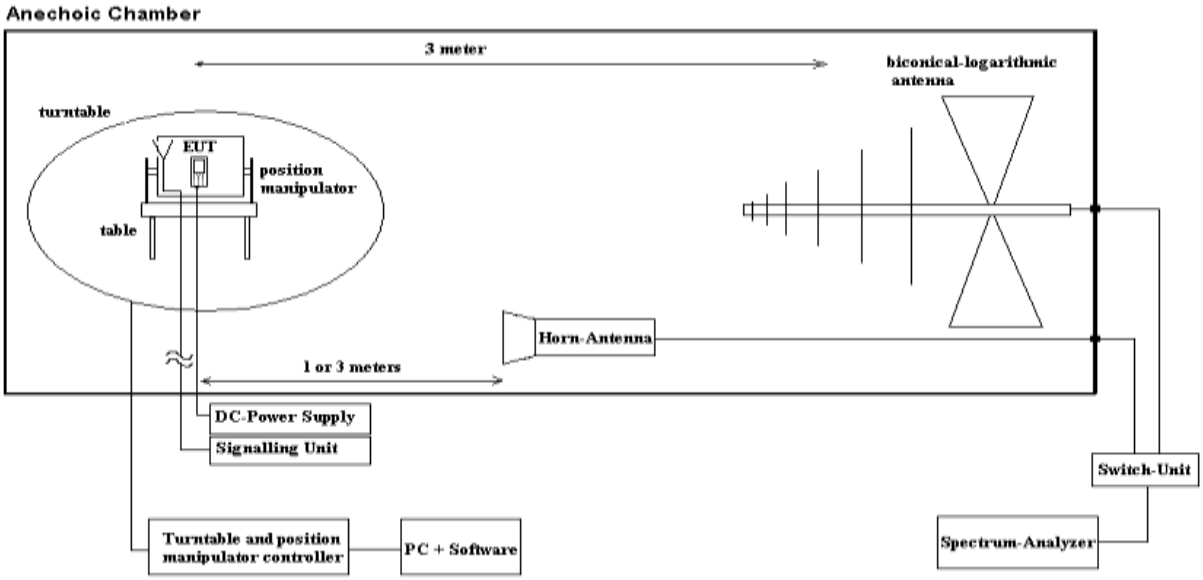

Schematic: radiated measurements test set-up

5. Measurements

5.1. RF power output (Conducted and Radiated)

REFERENCES

FCC: §2.1046 (conducted), §22.913(a)(2), § 24.232(c)
IC: RSS-132:4.4 + SRSP 503:5.1.3 for GSM 850; RSS-133:6.4 + SRSP-510:5.1.2 for GSM 1900

- Maximum Power Output of the mobile phone should be determined while measured conducted and radiated way.

TEST SET-UP (CONDUCTED)

- see conducted measurement set-up, description in chapter 4.1, schematic 2
- a suitable artificial antenna or RF-connector is provided by the applicant in order to perform the conducted measurements. Any data provided with the artificial antenna or connector, have been taken in account in order to correct the measurement data.

MOBILE PHONE SETTINGS

- according 3.7

BASE STATION SETTING

- according 3.7

TEST METHOD

1.) The measurements were made at the upper, middle and lower carrier traffic frequencies of the operating band. Choosing three TX-carrier frequencies of the mobile phone within each operable GSM band, should be sufficient to demonstrate compliance.
2.) The measurements were performed with the integrated power measurement function of the „radio communication tester *CMU* from *Rohde&Schwarz* company. In this way spectrum-analyzers instrument limitations can be avoided or minimized. Instead, *CMU* manufacturers declared measurement error can be considered for this measurement.
3.) The attenuation (insertion loss) at the RF Inputs/Outputs of *CMU* were set according the path loss of the test set-up, determined in a step before starting the measurements.
4.) PK and Average values have been recorded for each channel and band.

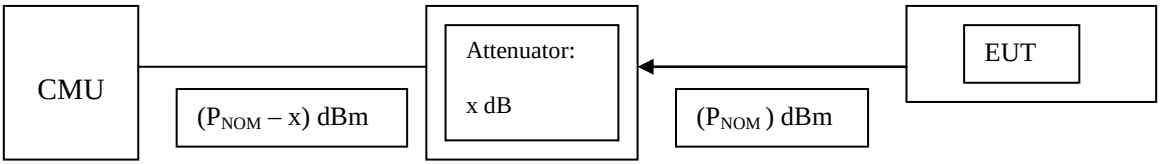

RESULTS (CONDUCTED)

Op. Mode 1, Set-up 3

Channel/ Frequency (MHz)		Peak Output Power (dBm)	Average Output Power (dBm)
GSM 850	Channel 128/ 824.2 MHz	32.1	32.0
	Channel 190/ 836.6 MHz*)	32.3	32.1
	Channel 192/ 837.0 MHz	32.3	32.2
	Channel 251/ 848.8 MHz	32.4	32.3

Remark: -

*) Channel 190 was tested for customers information too

Op. Mode 2, Set-up 3

Channel/ Frequency (MHz)		Peak Output Power (dBm)	Average Output Power (dBm)
GSM 1900	Channel 512/ 1850.2 MHz	29.2	29.0
	Channel 661/ 1880.0 MHz	29.6	29.4
	Channel 810/ 1909.8 MHz	29.9	29.7

Remark: -

PAR factor for GSM Modulation is approx 0.1 to max. 0.2 far away from the limit of 13dB as stated in the rules.

VERDICT: Passed

AMBIENT ENVIRONMENTAL CONDITIONS

Temperature	21.5 °C
Relative Humidity	40.5 %
Air pressure	1008 hPa

TEST EQUIPMENT

Used equipment (see reference in the annex)
R&S CMU200 Ref. No. 436, Cable OTA20, attenuator 6dB, Ref. No. 248

5.1.1. Radiated RF-Power

TEST METHOD

The measurements were made at the upper, center, and lower carrier traffic frequencies of each of the supported operating band. Choosing three TX-carrier frequencies of the mobile phone, should be sufficient to demonstrate compliance.
The measurements were performed by using the **substitution method** (ANSI/TIA/EIA 603) with a spectrum-analyzer. This method can be described like follows:

1.) choosing of suitable spectrum-analyzer settings for performing the measurements. This settings of the spectrum analyzer must be maintained for both stages of the measurements: EUT emission measurements and also for measurements of the substituted level.

Parameter	Setting for GSM measurements	Settings for UTRA/FDD measurements
RBW	1 MHz	10 MHz
VBW	10 MHz	10 MHz
Span	8 MHz	8 MHz
Detector Mode	Positive max-hold	Positive max-hold
Average	off	off
Sweep Time	coupled	coupled

2.) The maximum level of the peak power was recorded, while the emissions were maximized by rotating the EUT in three orthogonal axes, which was situated on a non-conductive turntable of 1.55 m height ($P_{MEAS,1}$). This was performed for both measuring antenna polarisations (vertical/horizontal), the maximum of both values is used for further measurements and final substitution ($P_{MEAS,\ 1,\ MAX}$).
3.) As the maximum emission is recorded, the EUT is replaced by a frequency dependant suitable antenna, which is connected to a RF-signal generator, which is transmitting on the determined worst-case frequency as determined in step 2.
4.) The RF-signal level of the signal generator is adjusted as long the same worst-case level determined first step is measured at the spectrum analyzer ($P_{SMHU}=P_{MEAS,1,\ MAX}$)
5.) Than the RF-signal cable is disconnected from the antenna and connected to a power-level meter. The level is determined ($P_{MEAS,2}$).
6.) The final result is calculated by adding the ERP/EIRP gain of the antenna which substitutes the EUT.
$P_{EUT,SUBST} = P_{MEAS,2} + G_{Antenna}$

GSM RESULTS (RADIATED):

OP. MODE 1, SET-UP 1

Channel/ Frequency (MHz)		Peak Output Power (dBm)			Antenna Polarisation for maximum Power	Verdict
		PK	AV			
GSM 850	Channel 128/ 824.2 MHz	25.06	1.)	ERP-Value	V/H	Passed
	Channel 192/ 837.0 MHz	29.01				
	Channel 251/ 848.8 MHz	23.81				
E-GPRS 850	Channel 128/ 824.2 MHz	Not supported mode		ERP-Value	V/H	--
	Channel 192/ 837.0 MHz					
	Channel 251/ 848.8 MHz					

Remark: -
1.) PAR factor can be used from conducted measurement and subtracted from radiated ERP PK-value.

Op. Mode 2, Set-up 1

Channel/ Frequency (MHz)		Peak Output Power (dBm)			Antenna Polarisation for maximum Power	Verdict
		PK	AV			
GSM 1900	Channel 512/ 1850.2 MHz	27.25	1.)	EIRP-Value	V/H	Passed
	Channel 661/ 1880.0 MHz	27.59				
	Channel 810/ 1909.8 MHz	27.42				
E-GPRS 1900	Channel 512/ 1850.2 MHz	Not supported mode		EIRP-Value	V/H	--
	Channel 661/ 1880.0 MHz					
	Channel 810/ 1909.8 MHz					

Remark: -

1.) PAR factor can be used from conducted measurement and subtracted from radiated EIRP PK-value.

AMBIENT ENVIRONMENTAL CONDITIONS

Temperature	20.2 °C
Relative Humidity	46 %
Air pressure	1011 hPa

TEST EQUIPMENT

Used equipment at FAR system[Ref. No.443] (see reference in the annex)
549, 443, 439, 264, 460

5.2. Occupied bandwidth

REFERENCES

FCC: §2.1049; §22.917(a), §24.238(a)
IC:RSS-Gen:4.6.1

„the **occupied bandwidth** is the frequency bandwidth, such that, below it lower and above it upper frequency limits, the mean powers radiated are each equal to 0.5 percent of the total mean power radiated.

TEST SET-UP

- see conducted measurement set-up described in 4.1, schematic 1

MOBILE PHONE SETTINGS

- Provisions with the requirements is based on the fact, that GSM modulation scheme is GMSK Modulation for GSM equipment with a maximum data transmission rate of 17,6 kBit/s per Slot.
- Provisions with the requirements is based on the fact, that EDGE modulation scheme is 8-PSK Modulation for EDGE equipment with a maximum data transmission rate of 69,2 kBit/s per Slot.
- according settings described in chapter 3.7 a call was established

SETTINGS OF THE SPECTRUM-ANALYSER

Frequency range	RBW (resolution bandwidth)	VBW (video bandwidth)
1 MHz around carrier frequency	*1% from applicants stated/measured emission bandwidth*	*3..10 times the RBW*

TEST METHOD

The measurements were made at the upper, middle and lower carrier traffic frequencies of the operating band. Choosing three TX-carrier frequencies of the mobile phone within each operable GSM band, should be sufficient to demonstrate compliance

Additionally the emission bandwidth (-26 dBc bandwidth) was recorded for all three channels. The results were taken in order to determine according the §24.238 the measurement resolution bandwidth, which should be approximately 1% of the emission bandwidth.

RESULTS

Set-up 3, Op-Mode 1

Channel/ Frequency (MHz)		Occupied 99% bandwidth [kHz]	Emission bandwidth [kHz]
GSM 850	Channel 128/ 824.2 MHz	245.192	315.705
	Channel 192/ 837.0 MHz	245.192	317.307
	Channel 251/ 848.8 MHz	245.192	314.102

Remarks: See separate document A1 for more details

Set-up 3, Op-Mode 2

Channel/ Frequency (MHz)		Occupied 99% bandwidth [kHz]	Emission bandwidth [kHz]
GSM 1900	Channel 512/ 1850.2 MHz	245.192	314.102
	Channel 661/ 1880.0 MHz	245.192	315.705
	Channel 810/ 1909.8 MHz	245.192	312.500

Remarks: See separate document A1 for more details

AMBIENT ENVIRONMENTAL CONDITIONS

Temperature	19.8 °C
Relative Humidity	39 %
Air pressure	1007 hPa

TEST EQUIPMENT

Used equipment at the Radio Laboratory [ref.no. 347] (see reference in the annex)
298, 354, 468, 489, 529, 530, 517 (RF-Relay Unit Keithley)

5.3. Radiated emissions, below 30 MHz, §15.205 and §15.209C, RSS210, RSS310, RSS-gen

TEST LOCATION AND EQUIPMENT (for reference numbers please see chapter 'List of test equipment')

test location	☒ CETECOM Essen)		☐		☐	
test site	☒ 441 EMI SAR	☐ 487 SAR NSA	☐ 337 OATS	☐ 347 Radio.lab.	☐	☐
receiver	☐ 377 ESCS30	☒ 001 ESS	☐	☐	☐	☐
spectr. analys.	☐ 381 380 FSBS	☐ 120 FSEM	☐ 264 FSEK	☐	☐	☐
antenna	☐ 048 EMCO3143	☐ 133 EMCO3115	☐ 302 BBHA9170	☐ 289 CBL 6141	☒ 030 HFH-Z2	☐ 477 GPS
signaling	☐ 298 CMU	☐ 460 CMU	☐ 295 RACAL	☒ 392 MT8820A		
power supply	☒ 456 EA 3013A	☐ 457 EA 3013A	☐ 459 EA 2032-50	☐ 268 EA- 3050	☐ 494 AG6632A	☐ 498 NGPE 40
otherwise	☐ 400 FTC40x15E	☐ 401 FTC40x15E	☐ 110 USB LWL	☐ 482 Filter Matrix		

STANDARDS AND LIMITS: CFR 47, PART 15, SUBPART B, §15.205, §15.209, ANSI C63.4:2003

Frequency [MHz]	Field strength [µV/m]	Field strength [dBuV/m]	Measurement distance [meters]	Remarks
0.009 – 0.490	2400/f (kHz)	67.6 – 20Log(f) (kHz)	300	Correction factor used due to measurement distance of 3m
0.490 – 1.705	24000/f (kHz)	87.6 – 20 Log(f) (kHz)	30	Correction factor used due to measurement distance of 3m
1.705 – 30	30	29.54	30	Correction factor used due to measurement distance of 3m
Remark: * decreases with the logarithm of the frequency				

TEST CONDITION AND MEASUREMENT TEST SET-UP

link to test system (if used):	☒ air link	☐ cable connection	☐
EUT-grounding	☒ none	☐ with power supply	☐ additional connection
Equipment set up	☒ table top		☐ floor standing
Climatic conditions	Temperature: (24°C)		Rel. humidity: (30)%
EMI-Receiver (Analyzer) Settings	Span/Range: 9kHz to 150kHz; 150 kHz to 30 MHz RBW/VBW: 200Hz/auto; 10 kHz/ auto (CISPR#16) Detector/ Mode: PEAK, TRACE max-hold mode, repetitive scan for exploratory measurements Quasi-Peak, for final measurement on critical frequencies (fy<1GHz)		

GENERAL MEASUREMENT PROCEDURES:

The measurement test set-up and test procedure are in accordance with the provisions described in ANSI 63.4: 2009

The **Equipment under Test** (EUT) was set-up to defined operating mode and installed (connected) to accessory equipment according the general description of use given by the applicant.

The measurement loop antenna was situated in 3m distance to the EUT. Radiated magnetic emission measurements were made with the antenna situated in 1 meter height. The loop antenna was moved at least to 2-perpendicular axes (antenna vector in direction of EUT and parallel to EUT) in order to maximize the emissions, the EUT itself either over 3-orthogonal axes (no defined usage position) or 2-orthogonal axis (defined usage position) by the position manipulator.

According the standard the compliance should be checked in 30m and 300m measurement distance. Therefore a additional extrapolation factor was used in order to normalize the measurement data. The frequency dependent extrapolation factor used for this reduced measurement distance, can be found in the chapter 9.

MEASUREMENT RESULTS

Channel 512

Set-up No.		2								
Operating Mode		2								
Diagram no.	Frequency (MHz)	MaxPeak (dBµV/m)	Meas. Time (ms)	Bandwidth (kHz)	Antenna height (cm)	Polarity	Turntable position (deg)	Corr. (dB) (C_F)	Mar-gin (dB) (M)	Limit (dBµV/m) (L_T)
3.01	--	<15.48	1000	0.2/10.00	100.00	Parallel and 90° to the EUT	0..360°	See below Abbrevi-ation	>14 dB	below Limit

Remark: External Interferer between 17,2 kHz – 100 kHz, see also plots enclosed in annex 1

Channel 661

Set-up No.		2								
Operating Mode		2								
Diagram no.	Frequency (MHz)	MaxPeak (dBµV/m)	Meas. Time (ms)	Bandwidth (kHz)	Antenna height (cm)	Polarity	Turntable position (deg)	Corr. (dB) (C_F)	Mar-gin (dB) (M)	Limit (dBµV/m) (L_T)
3.02	--	<14.54	1000	0.2/10.00	100.00	Parallel and 90° to the EUT	0..360°	See below Abbrevi-ation	>15 dB	below Limit

Remark: External Interferer between 17,2 kHz – 100 kHz, see also plots enclosed in annex 1

Channel 810

Set-up No.		2								
Operating Mode		2								
Diagram no.	Frequency (MHz)	MaxPeak (dBµV/m)	Meas. Time (ms)	Bandwidth (kHz)	Antenna height (cm)	Polarity	Turntable position (deg)	Corr. (dB) (C_F)	Mar-gin (dB) (M)	Level (dBµV/m) (L_T)
3.03	--	< 15	1000	0.2/10.00	100.00	Parallel and 90° to the EUT	0..360°	See below Abbrevi-ation	>18 dB	Below Limit

Remark: External Interferer between 17,2 kHz – 100 kHz, see also plots enclosed in annex 1

Margin to Limit:

$$M = L_T - R_R + C_F + D_F$$
$$= L_T - R_R + \left(AF_{ANTENNA} + Cable_{LOSS}\right) + D_F$$

Remark: positive margin means passed result

Abbreviations used:

- R_R : Receiver readings in dBµV/m
- C_F: Transducer in dB = AF (antenna factor) + CL (cable loss)
- D_F : distance correction factor (if different measurement distance used than specified in the standard)
- L_T : Limit in dBµV/m

VERDICT

Radiated frequencies below 30 MHz: Passed

5.4. Emission limits (Spurious emission conducted/radiated)

REFERENCES

FCC: §2.1051-conducted,§15.111-conducted antenna terminal, §2.1053(a)-radiated, §22.917(a)(b); §24.238(a)(b),§2.1057(1)

IC: RSS-132:4.5.1, RSS-133:6.5.1 - TX-mode
RSS-132:4.6, RSS-133: 6.7(b) – RX-mode

„the power of emissions shall be attenuated below the transmitter output power (p) by at least least 43+10Log(P) dB“

FREQUENCY RANGE

TX: The spectrum was scanned from 30 MHz to the 10th harmonic of the highest frequency generated within the equipment. The detector used was Peak.

Limit TX: The specification that all emissions shall be attenuated below the transmitter power (P) by at least 43 + 10 log (P) dB, translates in the relevant power range of the mobile phone (1 to 0.001 W) to a constant limit of -13 dBm.

DESCRIPTION OF SET-UP

- see conducted set-up in chapter 4.1
- see radiated set-up in chapter 4.2

SETTINGS ON MOBILE PHONE

- The measurements in TX-mode were made at the upper, middle, and lower carrier frequencies of the operating band. Choosing three representative TX-carrier frequencies of the mobile phone within each operable GSM band, should be sufficient to demonstrate compliance with the emissions limits outside and adjacent to the frequency blocks.
- The measurements in RX-Mode were made at the middle tuning range of the receiver.
- The individual settings on base station and mobile phone were made according chapter 3.7

TEST METHOD RADIATED:

By rotating the EUT in three orthogonal planes, the emissions were recorded with Peak-Detector and Hold-Max function of the spectrum-analyzer. If the harmonic could not be detected above the noise floor, the ambient level was recorded. Measurement distance is 3m for frequencies up to 18GHz and 1m for frequencies greater then 18GHz. The readings on the spectrum analyzer are corrected with annually performed chamber path calibration values (see chapter 7), so the readings shown are equivalent to ERP/EIRP values. Critical measurements near the limit, are re-measured with a substitution method accord. ANSI/TIA/EIA 603.

SETTINGS OF SPECTRUM-ANALYSER

Frequency range	RBW (resolution bandwidth)	VBW (video bandwidth)
BAND-EDGE compliance: 1MHz immediately adjacent to the frequency blocks	1% from applicants stated/measured emission bandwidth	3..10 times the RBW
More than 1 MHz outside and adjacent the frequency blocks	1 MHz	3..10 MHz

RESULTS (CONDUCTED)

5.4.0.1. GSM TCH 850: Op. Mode 1, Set-up 3

Lowest channel: 128

Transmitting channel/ frequency: TX = 824.2 MHz							
Sweep frequency range: [MHz]	Diagram numbers	Remarkable highest peak found at [MHz]	Transducer	Margin to limit [dB]	Result [dBm]	Limit [dBm]	Verdict
Sweep 1	14.01	0.0343	--	--	-53.04	-13	Passed
Sweep 2	14.04	1648.0	--	--	-36.30		Passed 1.)
Sweep 3	14.07b	--	--	>13	--		Passed 2.)

Remark: see diagrams in annex 1 for more details

1.) Uplink TCH carrier on diagram
2.) Band-Block Edge (Block B‘) compliance performed with Average detector

Middle channel = 192

Transmitting channel/ frequency: TX = 837 MHz							
Sweep frequency range: [MHz]	Diagram numbers	Remarkable highest peak found at [MHz]	Transducer	Margin to limit [dB]	Result [dBm]	Limit [dBm]	Verdict
Sweep 1	14.02	0.0351	--	--	-52.19	-13	Passed
Sweep 2	14.05	3579.7	--	--	-33.21		Passed 1.)

Remark: see diagrams in annex 1 for more details

1.) BCCH and Downlink TCH carrier on diagram

Highest channel: 251

Transmitting channel/ frequency: TX = 848.8 MHz							
Sweep frequency range: [MHz]	Diagram numbers	Remarkable highest peak found at [MHz]	Transducer	Margin to limit [dB]	Result [dBm]	Limit [dBm]	Verdict
Sweep 1	14.03	0.0351	--	--	-53.04	-13	Passed
Sweep 2	14.06	3585.5	--	--	-32.44		Passed 1.)
Sweep 4	14.08b	--	--	>13	--		Passed 2.)

Remark: see diagrams in annex 1 for more details

1.) Uplink TCH carrier on diagram
2.) Band-Edge Block (Block B‘) compliance performed with Average detector

5.4.0.2. GSM 1900 Mode: Op. Mode 2, Set-up 3

Lowest channel: 512

Transmitting channel/ frequency: TX = 1850,2 MHz							
Sweep frequency range: [MHz]	Diagram numbers	Remarkable highest peak found at [MHz]	Transducer	Margin to limit [dB]	Result [dBm]	Limit [dBm]	Verdict
Sweep 1	14.09	0.0351	--	--	-52.98	-13	Passed
Sweep 2	14.12	3588	--	--	-32.92		Passed 1.)
Sweep 3	14.15b	--	--	>17	--		Passed 2)

Remark: see diagrams in Annex 1 for more details

1.) Uplink TCH carrier on diagram
2.) Band-Edge Block (Block A) compliance performed with Average detector

Middle channel: 661

Transmitting channel/ frequency: TX = 1880,0 MHz							
Sweep frequency range: [MHz]	Diagram numbers	Remarkable highest peak found at [MHz]	Transducer	Margin to limit [dB]	Result [dBm]	Limit [dBm]	Verdict
Sweep 1	14.10	0.0351	--	--	-51.94	-13	Passed
Sweep 2	14.13	2470.6	--	--	-31.96		Passed 1.)

Remark: see diagrams in Annex 1 for more details

1.) Uplink TCH carrier on diagram

Highest channel: 810

Transmitting channel/ frequency: TX = 1908,8 MHz							
Sweep frequency range: [MHz]	Diagram numbers	Remarkable highest peak found at [MHz]	Transducer	Margin to limit [dB]	Result [dBm]	Limit [dBm]	Verdict
Sweep 1	14.11	0.0343	--	--	-51.40	-13	Passed
Sweep 2	14.14	2428.0	--	--	-32.93		Passed 1.)
Sweep 3	14.16b	--	--	>15	--		Passed 2)

Remark: see diagrams in Annex 1 for more details

1.) Uplink TCH carrier on diagram
2.) Band-Edge Block (Block C) compliance performed with Average detector

RESULTS (RADIATED)

5.4.0.2.1. GSM 850 Mode: Set-up 1, Op. Mode 1

Lowest channel: 128

Transmitting channel/ frequency: TX = 824.2 MHz							
Sweep frequency range: [MHz]	Diagram numbers	Remarkable highest peak found at [MHz]	Worst-Antenna Polarisation	Transducer	Result [dBm]	Limit [dBm]	Verdict
Sweep 1	8.29/8.30	--	H/V	--	<-28.0	-13	Passed 1.)+2.)
Sweep 2	8.35/8.36	823.98	V	--	<-20.0		Passed 3.)
Sweep 4	8.39/8.40	--	V	--	<-21.5		Passed 1.)
Sweep 5	8.45/8.46	--	H/V	--	<-29.0		Passed 1.)

Remarks: see diagrams enclosed in annex A1, only worst-case polarisation mentioned
1.) only results near 20dB to the limit are referenced or noise level
2.) TX-carrier on the diagram
3.) Band-Edge compliance

Middle channel: 192

Transmitting channel/ frequency: TX = 837 MHz							
Sweep frequency range: [MHz]	Diagram numbers	Remarkable highest peak found at [MHz]	Worst-Antenna Polarisation	Transducer	Result [dBm]	Limit [dBm]	Verdict
Sweep 1	8.31/8.32	--	V	--	<-28.0	-13	Passed 1.)+2.)
Sweep 4	8.41/8.42	2489.7	H	--	-22.03		Passed 1.)
Sweep 5	8.47/ 8.48	--	H/V	--	<-29.0		Passed 1.)

Remarks: see diagrams enclosed in annex A1, only worst-case polarisation mentioned
1.) only results near 20dB to the limit are referenced or noise level
2.) TX-carrier on the diagram

Highest channel: 251

Transmitting channel/ frequency: TX = 849.8 MHz							
Sweep frequency range: [MHz]	Diagram numbers	Remarkable highest peak found at [MHz]	Worst-Antenna Polarisation	Transducer	Result [dBm]	Limit [dBm]	Verdict
Sweep 1	8.33/8.34	620.94	H	--	-32.31	-13	Passed 1.)+2.)
Sweep 3	8.37/8.38	--	V	--	<-18.5		Passed 3.)
Sweep 4	8.43/8.44	--	H/V	--	<-20.5		Passed 1.)
Sweep 5	8.49/8.50	--	H/V	--	<-29		Passed

Remarks: see diagrams enclosed in annex A1, only worst-case polarisation mentioned
1.) only results near 20dB to the limit are referenced or noise level
2.) TX-carrier on the diagram
3.) Band-Edge compliance

5.4.0.3. GSM 1900 Mode: Set-up 1, Op. Mode 2

Lowest channel: 512

Transmitting channel/ frequency: TX = 1850,2 MHz							
Sweep frequency range: [MHz]	Diagram numbers	Remarkable highest peak found at [MHz]	Worst-Antenna Polarisation	Transducer factor [dB]	Result [dBm]	Limit [dBm]	Verdict
Sweep 1	8.01/8.02	--	H/V	--	<-31.0	-13	Passed 1.)
Sweep 2 2.)	8.03/8.04	--	H/V	--	<-20.0		Passed 1.)+2.)
Sweep 3 4.)	8.05/8.06	1850.0	V	--	-32.11		Passed 4.)
Sweep 5	8.07/8.08	5547/5546	H/V	--	-37.89		Passed
Sweep 6	8.09/8.10	14910	H	--	-23.91		Passed
Sweep 7 5.)	8.51	--	--	--	<-25.0		Passed 5.)

Remark: see diagrams in annex 1 for more details, only worst-case polarisation mentioned

1.) only results near 20dB to the limit are referenced or noise level
2.) TX-carrier on diagram
4.) Band-Edge compliance
5.) overview measurement only

Middle channel: 661

Transmitting channel/ frequency: TX = 1880,0 MHz							
Sweep frequency range: [MHz]	Diagram numbers	Remarkable highest peak found at [MHz]	Worst-Antenna Polarisation	Transducer factor [dB]	Result [dBm]	Limit [dBm]	Verdict
Sweep 1	8.11/8.12	--	H/V	--	<-30.0	-13	Passed 1.)
Sweep 2	8.13/8.14	--	H/V	--	<-20.0		Passed 1.)+2.)
Sweep 5	8.15/8.16	5639	V	--	-37.29		Passed
Sweep 6	8.17/8.18	17890	V	--	-21.81		Passed
Sweep 7	8.52	--	--	--	<-25.0		Passed 5.)

Remark: see diagrams in annex 1 for more details, only worst-case polarisation mentioned

1.) only results near 20dB to the limit are referenced or noise level
2.) TX-carrier on diagram
5.) overview measurement only

Highest channel: 810

Transmitting channel/ frequency: TX = 1908,8 MHz							
Sweep frequency range: [MHz]	Diagram numbers	Remarkable highest peak found at [MHz]	Worst-Antenna Polarisation	Transducer factor [dB]	Result [dBm]	Limit [dBm]	Verdict
Sweep 1	8.19/8.20	--	H/V	--	< -30.0	-13	Passed 1.)
Sweep 2	8.21/8.22	--	H/V	--	<-20.0		Passed 1.)+2.)
Sweep 4	8.23/8.24	1910.0	V	--	-32.18		Passed 4.)
Sweep 5	8.25/8.26	5731.5	V	--	-37.59		Passed
Sweep 6	8.27/8.28	17120	V	--	-23.24		Passed
Sweep 7	8.53	--	--	--	<-25.0		Passed 5.)

Remark: see diagrams in annex 1 for more details, only worst-case polarisation mentioned

1.) only results near 20dB to the limit are referenced or noise level
2.) TX-carrier on diagram
4.) Band-Edge compliance
5.) overview measurement only

AMBIENT ENVIRONMENTAL CONDITIONS

Temperature	18.1 °C
Relative Humidity	44 %
Air pressure	1001 hPa

TEST EQUIPMENT

Used equipment at FAR system [ref. no. 443] (see reference in the annex)
549, 087, 264 , 439

5.5. Frequency stability on temperature and voltage variations

REFERENCES

FCC: §2.1055, §22.355, §24.235

IC: RSS-Gen:4.7, RSS-132:4.3, RSS-133:4.2+6.3

§22.355 Table C-1; § 24.235
"The frequency stability shall be sufficient to ensure that the fundamental emission stays within the authorized frequency block"

§ 2.1055
(*d) The frequency stability shall be measured with variation of primary supply voltage as follows:*
(1) Vary primary supply voltage from 85 to 115 percent of the nominal value for other than hand
carried battery equipment.
(2) For hand carried, battery powered equipment, reduce primary supply voltage to the battery operating end point which shall be specified by the manufacturer.

TEST SET-UP

In order to maintain the voltage constant over the time period of the tests, a dummy battery was connected to a laboratory power supply. The power supply voltage was controlled on the input of the power supply terminals of the EUT.
Compare with the conducted measurement test set-up described in chapter 4.1

MOBILE PHONE SETTINGS

- The measurements were made at the upper, middle, and lower carrier frequencies of the operating band. Choosing three representative TX-carrier frequencies of the mobile phone within each operable GSM band, should be sufficient to demonstrate compliance.
- Settings on base station and mobile phone ere made according chapter 3.7

TEST METHOD

The RF Channel spacing is 200kHz, with a guard band of 200kHz of each band of the sub-bands. The aim of the EUT is to function under all extreme conditions within authorized sub-bands in regard to temperature and voltage variations. The frequency deviation was recorded with base station's build in capability. (CMU)
As the standard requires that the fundamental emissions stays within the authorized band, a limit of 0.1ppm is considered low enough to ensure this.

Frequency shift of carrier against a voltage range at constant nominal temperature of 20° Celsius

1.) determine the carrier frequency for the lowest and highest channel at room temperature and nominal voltage [20°C]
2.) The voltage was reduced in 0.1V steps to the lower end point, where the mobile phone stops working. (this shall be specified by the manufacturer) Record the carrier frequency shift within 2 minutes after powering on the mobile phone, to prevent for self heating effects.
3.) The voltage was increased in 0.1V steps to the upper declared voltage of the battery. Record the carrier frequency shift within 2 minutes after powering on the mobile phone, to prevent for self heating effects.

RESULTS

5.5.0.1. GSM 850 Mode: Op. Mode 1, set-up 3

Voltage	Channel 128	Channel 192	Channel 251	Channel 128	Channel 192	Channel 251
	[Hz]			ppm		
3,32=Minimum	-22	-21	-28	-0,027	-0,025	-0,033
3,4	-24	-22	-23	-0,029	-0,026	-0,027
3,5	-20	-19	-18	-0,024	-0,023	-0,021
3,6	-23	-19	-26	-0,028	-0,023	-0,031
3,7	-26	-28	-18	-0,032	-0,033	-0,021
3,8	-25	-23	-25	-0,030	-0,027	-0,029
3,9	-25	-25	-25	-0,030	-0,030	-0,029
4,0	-25	-22	-26	-0,030	-0,026	-0,031
4,1	-22	-20	-24	-0,027	-0,024	-0,028
4,2	-25	-24	-23	-0,030	-0,029	-0,027
4,3	-25	-25	-25	-0,030	-0,030	-0,029
4,4	-23	-22	-26	-0,028	-0,026	-0,031
4,5=Maximum	-22	-22	-27	-0,027	-0,026	-0,032

Remark: -.

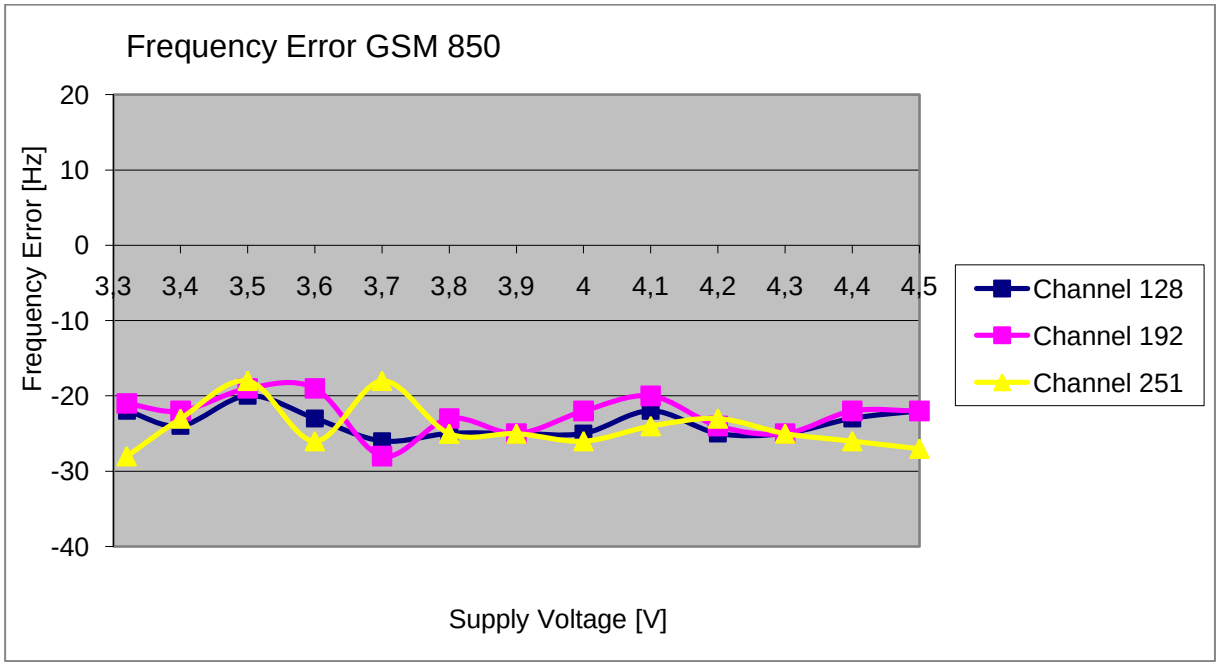

5.5.0.2. GSM 1900 Mode: Op. Mode 2, Set-up 3

Voltage	Channel 512	Channel 661	Channel 810	Channel 512	Channel 661	Channel 810
	[Hz]			[ppm]		
3,32=Minimum	42	50	46	0,023	0,027	0,024
3,4	45	48	41	0,024	0,026	0,021
3,5	51	51	45	0,028	0,027	0,024
3,6	39	42	48	0,021	0,022	0,025
3,7	43	44	51	0,023	0,023	0,027
3,8	-33	-34	-32	-0,018	-0,018	-0,017
3,9	35	36	40	0,019	0,019	0,021
4,0	-36	-33	47	-0,019	-0,018	0,025
4,1	29	46	45	0,016	0,024	0,024
4,2	37	43	40	0,020	0,023	0,021
4,3	40	40	53	0,022	0,021	0,028
4,4	35	41	38	0,019	0,022	0,020
4,5=Maximum	45	49	40	0,024	0,026	0,021

Remark: --

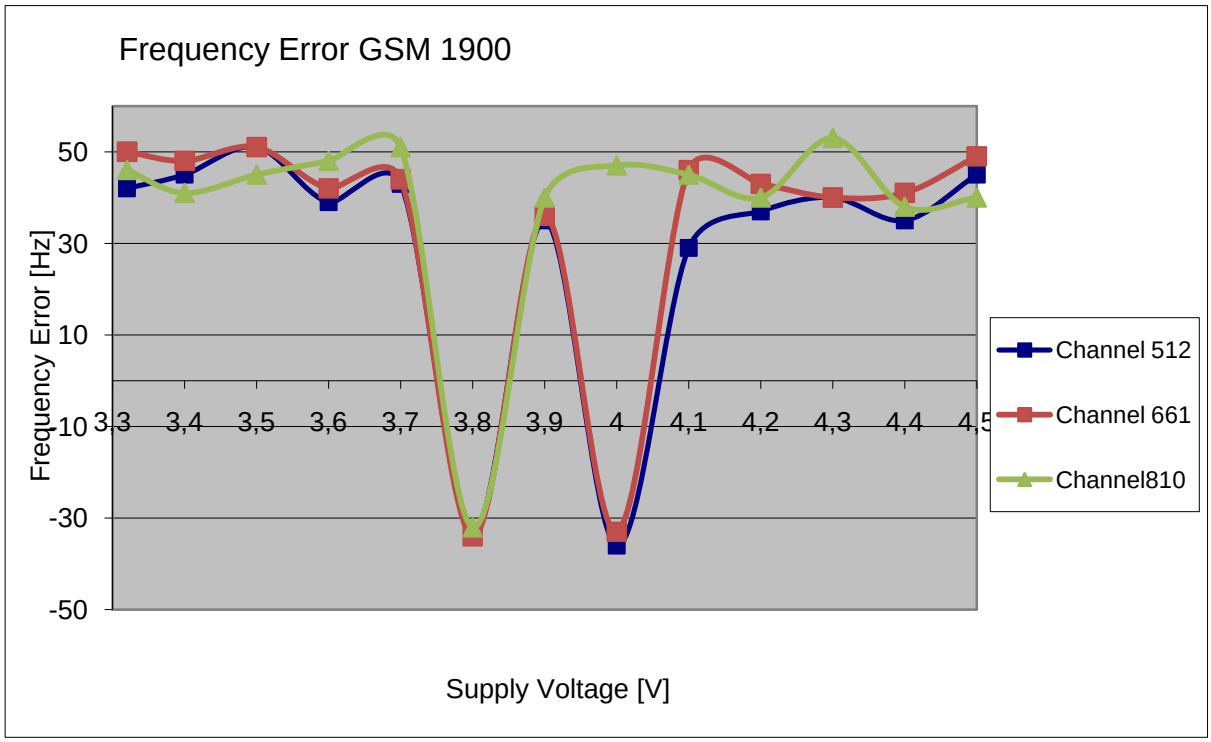

Frequency shift of carrier against temperature at constant power supply voltage

1.) determine the carrier frequency for the lowest, middle and highest channel at room temperature and nominal voltage [20°C]
2.) expose the mobile station to –30°C, wait sufficient time to have constant temperature.
3.) Perform the carrier frequencies measurements in 10°C increments from –30°C to +50°C. For about half hour at the specified temperature the mobile was powered-off. After powering-on, the measurements were made within 2 minute for the channel lower channel, in order to prevent self-warming of the mobile.

RESULTS

5.5.0.3. GSM850 Mode: Op. Mode 1, set-up 3

Temperature	Channel 128	Channel192	Channel 251	Channel 128	Channel 192	Channel 251
	[Hz]			[ppm]		
-30	-21	-28	-26	-0,025	-0,033	-0,031
-20	-22	-26	-23	-0,027	-0,031	-0,027
-10	-26	-26	-23	-0,032	-0,031	-0,027
0	-20	-36	-25	-0,024	-0,043	-0,029
10	-24	-25	-26	-0,029	-0,030	-0,031
20	-22	-22	-27	-0,027	-0,026	-0,032
30	-25	-25	-27	-0,030	-0,030	-0,032
40	-25	-28	-25	-0,030	-0,033	-0,029
50	-26	-27	-23	-0,032	-0,032	-0,027

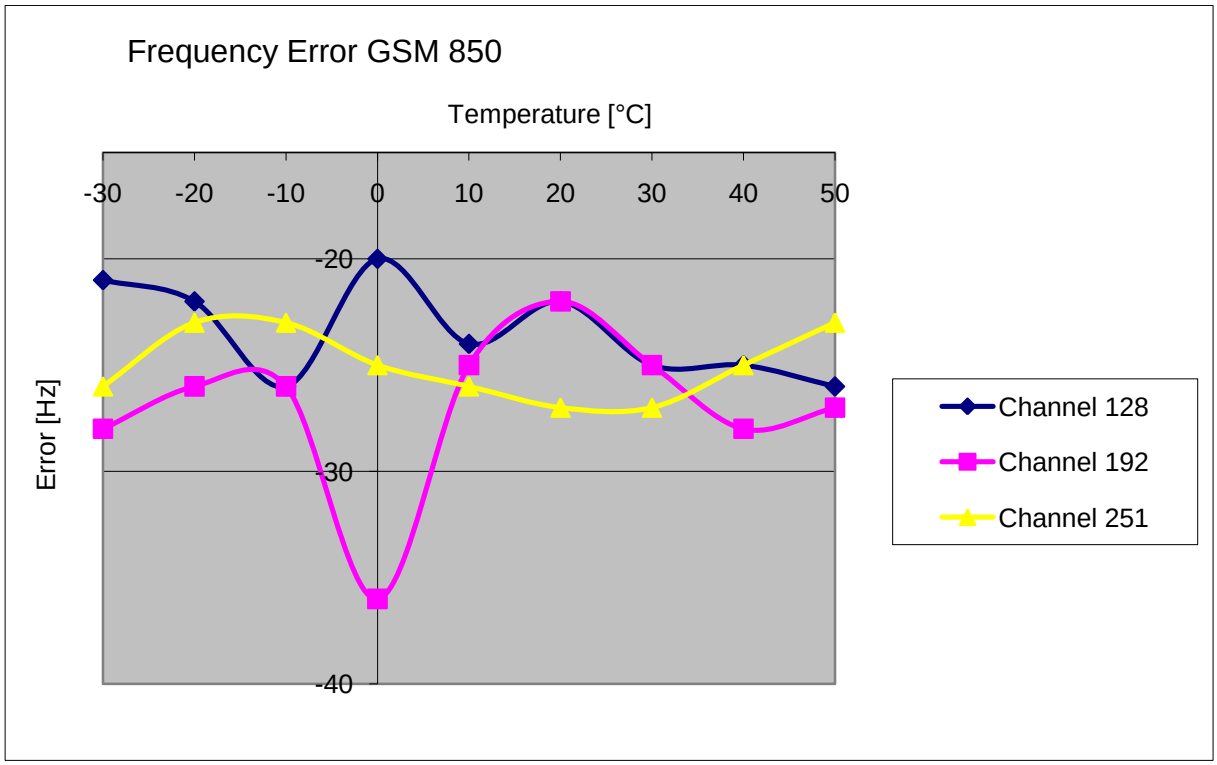

5.5.0.4. GSM 1900 Mode: Op. Mode 2, set-up 3

Temperature	CHANNEL 512	CHANNEL 661	CHANNEL 810	CHANNEL 512	CHANNEL 661	CHANNEL 810
	[Hz]			[ppm]		
-30	42	51	44	0,023	0,027	0,023
-20	35	45	43	0,019	0,024	0,023
-10	42	53	56	0,023	0,028	0,029
0	48	50	53	0,026	0,027	0,028
10	41	42	42	0,022	0,022	0,022
20	45	49	40	0,024	0,026	0,021
30	38	40	41	0,021	0,021	0,021
40	41	36	34	0,022	0,019	0,018
50	35	-35	45	0,019	-0,019	0,024

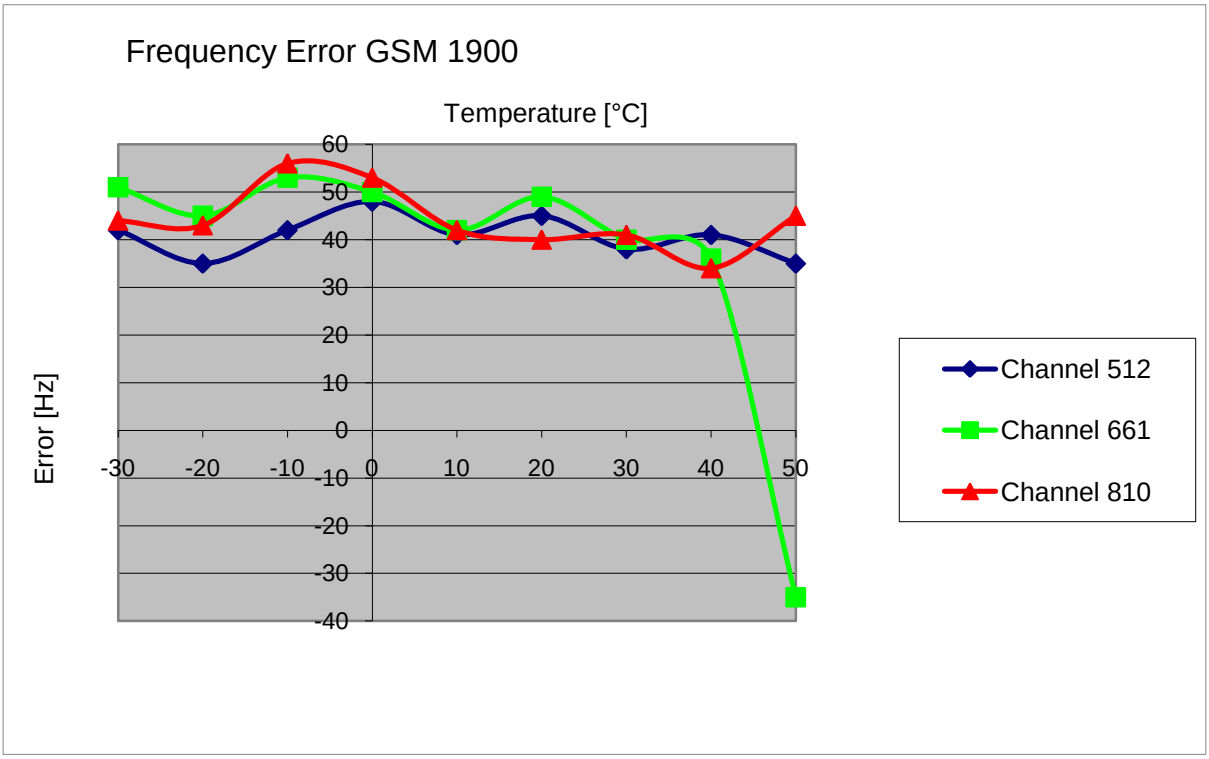

TEST EQUIPMENT

Used equipment at Radio Laboratory [ref. no. 347] (see reference in the annex)
298 (R&S CMU200)
354 (PS NGPE40/40)
468 (FLUKE 112 MM)
517 (RF-Relay Unit Keithley)
529 (6dB RF-Splitter)
530 (10dB Attenuator)
405 (OPUS Thermo/Hygrometer used for climatic chamber VT4002)

5.6. Conducted emissions on AC-Power lines

Test location and equipment (for reference numbers please see chapter 'List of test equipment')

test location	☒ CETECOM Essen (Chapter 2.2.1)		☐ Please see Chapter 2.2.2		☐ Please see Chapter 2.2.3	
test site	☐ 333 EMI field	☒ 377 ESCS 30	☐ 334 EMS-field	☐	☐ 347 Radio.lab.	☐ 337 OATS
receiver	☐ 001 ESS	☐ 377 ESCS 30	☐ 005	☐	☐	☐
LISN	☒ 005 ESH2-Z5	☐ 007 ESH3-Z6	☐ 300 ESH3-Z5 & 50Ω used for AE		☐ no LISN for AE	☐
signaling	☐ 017 CMD 65	☐ 323 CMD 55	☐ 340 CMD 55			
signaling	☐ 298 CMU	☐ 460 CMU	☐ 295 RACAL	☒ 392 MT8820A		

Standards and Limits: Part 15, Subpart C, §15.207, CANADA: RSS-Gen:7.2.2, ANSI C63.4:2009

Frequency [MHz]	Conducted limit [dBµV] §15.107 Class B, §15.207	
	QUASI-Peak	AVERAGE
0.15 – 0.5	66 to 56*	56 to 46*
0.5 – 5	56	46
5 – 30	60	50
Remark: * decreases with the logarithm of the frequency		

Test condition and measurement procedures test set-up

link to test system (if used):	☒ air link	☐ cable connection	☐
EUT-grounding	☒ none	☐ with power supply	☐ additional connection
Equipment set up	☒table-top (40 cm distance to reference ground plane (wall)		☐floor-standing EUT stands isolated on reference ground plane (floor)
Climatic conditions	Temperature: (23°C)		Rel. humidity: (77)%
EMI-Receiver (Analyzer) Settings	Span/Range: 150 kHz to 30 MHz RBW: 9 kHz Detector/Mode: Max PEAK-hold, repetitive scan for preliminary testing Quasi-Peak Detector and Average-Detector for final measurement according ANSI 63.4, CISPR 16		

Devices which can be connected to the public AC-power network, should be tested against the radio frequency voltage conducted back into the AC-power line in the frequency range 150kHz to 30 MHz. Compliance should be tested by measuring the radio frequency voltage between each power line and ground at the power terminals in the stated frequency range.
A 50Ohm/50µH line impedance stabilization network (LISN) is used therefore. The EUT power input leads are connected through the LISN to the AC-power source. The LISN enclosure is electrically connected to the GND-plane. The measuring instrument is connected to the coaxial output of the LISN.
Tabletop devices were set-up on a 80 cm height over reference ground plane, floor standing equipment 10 cm raised above ground plane.
Measurements have been performed on each phase line and neutral line of the devices AC-power lines. The EUT was power supplied with 110 V/60Hz.
The EUT was tested in the defined operating mode and installed (connected) to accessory equipment according the general description of use given by the applicant.
Preliminary testing as a first step, determines the worst-case phase line (neutral or phase) as well as the most critical amplitude by changing the operating mode. A complete frequency-sweep is performed with PK-Detector.
Final testing for power phases and critical frequencies (Margin to AV- or QP limit lower than 3dB) as a second step includes measurements either on discrete frequency components with receivers detector set to Quasi-Peak and Average per frequency component or a complete sweet with corresponding detector.

Measurement results

For showing compliance with conducted limits a commercial available AC/DC adapter (AE2) was chosen for delivering the required 9 V DC to the DSB75 board (EUT E).

EUT Type and S/N or EUT set-up no.		4			
Diagram No.	Command or EUT operating mode or operating mode no.	Detector (Peak, CISPR AV, CISPR QP)	Power line (L1, L2, L3, N)	Additional (scan-) information (e.g. Pre-test Fast scan, Maxhold, Final measurement)	Result (passed / failed /final measurem. necessary)
1.4	EUT operating mode 1	Peak, AV,QP	L1, N	The Diagram shows PK/AV detector measurements on L1 and N with max-hold mode. Final measurement QP and AV was carried out on at least one frequency	passed
1.2	EUT operating mode 2	Peak, AV,QP	L1, N	The Diagram shows PK/AV detector measurements on L1 and N with max-hold mode. Final measurement QP and AV was carried out on at least one frequency	passed

Remarks: pls. see annex 1 for detailed diagrams

Margin to Limit for verdict: $M = L_T - R_R + C_{Loss}$

Abbreviations used:
- R_R : Receiver readings in dBµV
- C_{Loss}: cable loss
- L_T : Limit in dBµV

Verdict

Summary of measurement results for conducted emissions on AC-Power lines: Passed

Additionally test equipment

Used equipment (see reference in the annex)
016 (Spitzenberger Spies 110V&60Hz) 468 (FLUKE 112 MM)

6. Calibration method of anechoic chamber

For non-critical frequencies a pre-calibration method was used for determining the relevant radiated field-strength of radiated spurious in the anechoic chamber.

Generally the measured value is influenced by the characteristics of the used cables, filters, antenna, but also by the characteristic of the anechoic chamber.
By defining a ***transducer*** value, which include all characteristics of the signal propagation path (used equipment, cables, properties of anechoic chamber, etc..) from the source of radiation to the final reading equipment (spectrum-analyzer), the measured value can be corrected in order to get the real value of the device under test.

The method resumes as follows:

1.) determination of the path-loss of all cables used on the TX- and RX-side, which are used for the radiated measurement in the specific set-up for 1 meter and 3 meter distance.
2.) connection of the cables to the relevant antennas used for calibration.
3.) determination of the ***space attenuation loss*** *(G)* in the anechoic-chamber for both horizontal and vertical antenna polarisations:

A signal generator connected to the TX-antenna sweeps the frequency range of interest (30 MHz to 19.5 GHz) with a level of –30dBm - the readings on the RX-side on the spectrum analyzer gives the ***space attenuation loss.*** The distance between RX- and TX-antenna is 3 meter for frequencies below 18 GHz, and 1 meter for frequencies above 18 GHz.

4.) Mathematical determination of the frequency dependant transducer values ($TD_{H/V}$):

$$TD_{H/V} = G_{H/V} + B_{H/V} - 10 \cdot \log_{10}(1{,}64) + D + E - F$$

Abreviations:

$TD_{H/V}$ = λ/2 transducer values for horizontal /vertical antenna polarisations
$G_{H/V}$ = space attenuation loss horizontal/ vertical
$B_{H/V}$ = Gain of TX-antenna

$10 * \mathrm{Log}_{10}(1.64)$ = Gain in dB of λ/2 Dipole relative to isotropic radiator
D = insertion losses of RX cable
E = Loss of filters in signal path (not used for FCC measurements)
F = Gain of pre-amplifiers in signal path

5.) The transducer values are recorded for horizontal and vertical polarisations in two reference distances to the measurement antenna (1 meter and 3 meter). EIRP can be calculated from ERP by adding the gain of the lambda/2 dipole EIRP = ERP + 2.14 dBi
6.) The specific transducer tables are loaded in the spectrum analyzer after each measurement. The readings on the spectrum-analyzer are automatically corrected by this values and can directly be compared with the limits as given in the relevant standards. The loaded values are displayed in each diagram and can be compared to internal calibration documents annually performed.

Used equiment for calibration (3 meter distance)

Used equipment (see reference)
264, 549, 020, 140, 484, 439,

Used equiment for calibration (1 meter distance)

Used equipment (see reference)
302, 303, 140, 264

7. Measurement uncertainties

The reported uncertainties are calculated based on the standard uncertainty multiplied with the appropriate coverage factor **k**, such that a confidence level of approximately 95% is achieved.

For uncertainty determination, each component used in the concrete measurement set-up was taken in account and it's contribution to the overall uncertainty according it's statistical distribution calculated.

Following table shows expectable uncertainties for each measurement type performed.

Measurement	Frequency range	Calculated uncertainty based on a confidence level of 95%	Remarks:
RF-Power Output conducted	9 kHz .. 20 GHz	1.0 dB	--
RF-Power Output radiated	30 MHz .. 4 GHz	3.17 dB	Substitution method
Conducted RF-emissions on antenna ports	9 kHz .. 20 GHz	1.0 dB	--
Radiated RF-emissions enclosure	150 kHz .. 30 MHz	5.0 dB	Magnetic field
	30 MHz .. 1 GHz	4.2 dB	E-Field
	1 GHz .. 18GHz	4.8 dB	E-Field
	1 GHz .. 20 GHz	3.17 dB	Substitution method
Occupied bandwidth	9 kHz .. 4 GHz	0.1272 ppm (Delta Marker method)	Frequency error
		1 dB	Power
Emission bandwidth	9 kHz .. 4 GHz	0.1272 ppm (Delta Marker method)	Frequency error
		1 dB	Power
Frequency stability	9 kHz .. 20 GHz	0.0636 ppm	--
Conducted emissions on AC-mains port (U_{CISPR})	9 kHz .. 150 kHz	4.0 dB	--
	150 kHz .. 30 MHz	3.6 dB	

Table : measurement uncertainties, valid for conducted/radiated measurements

8. Instruments and Ancillary

8.1. Used equipment "CTC"

The "Ref.-No" in the left column of the following tables allows the clear identification of the laboratory equipment.

8.1.1. Test software and firmware of equipment

Ref.-No.	Equipment	Type	Serial-No.	Version of Firmware or Software during the test
001	emi test receiver	ESS	825132/017	Firm.= 1.21 , OTP=2.0, GRA=2.0
012	signal generator (EMS-cond.)	SMY 01	839069/027	Firm.= V 2.02
013	power meter (EMS cond.)	NRVD	839111/003	Firm.= V 1.51
017	Communication Tester	CMD 60 M	844365/014	Firmware = V 3.52 .22.01.99, DECT Firmware D2.87
053	audio analyzer	UPA3	860612/022	Firm. V 4.3
119	RT harmonics analyser/dig. flickermeter	B10	G60547	Firm.= V 3.1DHG
140	signal generator	SMHU	831314/006	Firm.= 3.21
261	thermal power sensor	NRV-Z55	825083/0008	EPROM-Datum 02.12.04, SE EE 1 B
262	power meter	NRV-S	825770/0010	Firm.= 2.6
263	signal generator	SMP 04	826190/0007	Firm.=3.21
264	spectrum analyzer	FSEK 30	826939/005	Bios=2.1, Analyzer= 3.20
295	Racal Digital Radio Test Set	6103	1572	UNIT Firmware= 4.04, SW-Main=4.04, SW-BBP=1.04,
298	Univ. Radio Communication Tester	CMU 200	832221/091	R&S Test Firmware =3.53 /3.54 (current Testsoftw. f.
323	Communication Tester	CMD 055	825878/0034	Firm.= 3.52 .22.01.99
331	climatic test chamber -40/+80 Grad	HC 4055	43146	TSI 1.53
335	System-CTC-EMS-Conducted	System EMS Conducted	-	EMS-K1 Immunity Test-Software 1.20SR10
340	Univ. Communication Tester	CMD 55	849709/037	Firm.= 3.52 .22.01.99
355	power meter	URV 5	891310/027	Firm.= 1.31
365	10V Insertion Unit 50 Ohm	URV5-Z2	100880	Eprom Data = 31.03.08
366	Ultra Compact Simulator	UCS 500 M4	V0531100594	Firm. UCS 500=001925/3.06a02, rc=ISMIEC 4.10
371	Bluetooth Tester	CBT32	100153	CBT V4.6.1 + SW-Option K55
377	emi test receiver	ESCS 30	100160	Firm.= 2.30, OTP= 02.01, GRA= 02.36
378	broadband RF field monitor	RadiSense III	03D00013SNO-08	Firm.= V.03D13
383	signal generator	SME 03	842 828 /034	Firm.= 4.61
389	digital multimeter	Keithley 2000	0583926	Firm. = A13 (Mainboard) A02 (Display)
392	Radio Communication Tester	MT8820A	6K00000788	Firm.= 4.50 #005, IPL=4.01#001,OS=4.02#001,
441	System CTC-SAR-EMI Cable Loss	System EMI field (SAR)	-	EMC 32 Version 8.10,10
442	System CTC-SAR-EMS	System EMS field (SAR)	-	EMS-K1 Immunity-Software 1.20SR10
443	System CTC-FAR-EMI-Spuri	System CTC-FAR-EMI-	-	Spuri 7.2.5
444	System CTC_FAR-EMS	System EMS-Field (FAR)	-	EMS-K1 Immunity-Software 1.20SR10
460	Univ. Radio Communication Tester	CMU 200	108901	R&S Test Firmware Base=5.14/Messsoftware=
489	emi test receiver	ESU40	1000-30	Firmware=4.43 SP3, Bios=V5.1-16-3,
491	ESD Simulator dito	ESD dito	dito307022	V 2.30
524	Voltage Drop Simulator	VDS 200	0196-16	Software Nr: 000037 Version V4.20a01
526	Burst Generator	EFT 200 A	0496-06	Software Nr. 000034 Version V2.32
527	Micro Pulse Generator	MPG 200 B	0496-05	Software-Nr. 000030 Version V2.43
528	Load Dump Simulator	LD 200B	0496-06	Software-Nr. 000031 Version V2.35a01
547	Univ. Radio Communikation Tester	CMU 200	835390/014	R&S Test Firmware Base=V5.1403 (current Testsoftw.
584	Spectrum Analyzer	FSU 8	100248	2.82_SP3
594	Communikation Tester	CMW500	101757	Firmware and Applications 1.0.15.23
597	Univ. Radio Communication Tester	CMU 200	100347	R&S Test Firmware Base=5.01 /Messsoftware=
598	Spectrum Analyser	FSEM 30	831259/013	Firmware Bios 3.3 , Analyzer 3.3

8.1.2. Single instruments and test systems

Ref.-No.	Equipment	Type	Serial-No.	Manufacturer	Interval of calibration	Remark	Cal due
001	emi test receiver	ESS	825132/017	Rohde & Schwarz	12 M	-	31.03.2011
005	AC - LISN (50 Ohm/50µH, test site 1)	ESH2-Z5	861741/005	Rohde & Schwarz	24 M	-	31.03.2012
007	DC - LISN (50 Ohm/5µH)	ESH3-Z6	892563/002	Rohde & Schwarz	24 M	-	31.03.2012
009	power meter (EMS-radiated)	NRV	863056/017	Rohde & Schwarz	12 M	-	31.03.2011
011	insertion unit (EMS-radiated)	URV5-Z2	864169/004	Rohde & Schwarz	24 M	-	31.03.2011
012	signal generator (EMS-cond.)	SMY 01	839069/027	Rohde & Schwarz	36/12 M	-	31.03.2011
013	power meter (EMS cond.)	NRVD	839111/003	Rohde & Schwarz	24 M	-	31.03.2011
014	insertion unit (EMS cond.)	URV5-Z2	838519/029	Rohde & Schwarz	24 M	-	31.03.2011
015	insertion unit (EMS cond.)	URV5-Z4	838570/024	Rohde & Schwarz	24 M	-	31.03.2011
016	line impedance simulating network	Op. 24-D	B6366	Spitzenberger+Spies	36 M	-	31.03.2013
017	Communication Tester	CMD 60 M	844365/014	Rohde & Schwarz	12 M	-	31.03.2011
020	horn antenna 18 GHz (Subst 1)	3115	9107-3699	EMCO	36/12 M	-	31.03.2013
021	loop antenna (H-Field)	6502	9206-2770	EMCO	36 M	-	31.03.2013
022	audio measurement amplifier	2636C	1537643	Brüel & Kjaer	12 M	-	31.03.2011
030	loop antenna (H-field)	HFH-Z2	879604/026	Rohde & Schwarz	36 M	-	31.03.2012
031	absorbing clamp	MDS-21	863325/015	Rohde & Schwarz	24 M	-	31.03.2012
033	RF-current probe (100kHz-30MHz)	ESH2-Z1	879581/18	Rohde & Schwarz	24 M	-	31.03.2011
049	current clamp (injection)	F-120-2	48	FCC	12 M	-	31.03.2011
050	3-ph coupling-decoupling-netw. (Burst)	CDN 300	176	Schaffner	24 M	-	31.03.2012
051	VHF-current probe 20-300 MHz	ESV-Z1	872421	Rohde & Schwarz	36 M	-	31.03.2012
052	notch filter DECT	WRCB 1887,82/1889,55SS	12	Wainwright Industries	pre-m	-	30.05.2011
053	audio analyzer	UPA3	860612/022	Rohde & Schwarz	36 M	-	31.03.2011
057	relay-switch-unit (EMS system)	RSU	494440/002	Rohde & Schwarz	-	1a	30.05.2011
058	capacitive clamp (Burst)	IP 4	99	Hafely	-	4	
060	power amplifier (DC-2kHz)	PAS 5000	B6363	Spitzenberger+Spies	-	3	
066	notch filter (WCDMA; FDD1)	WRCT 1900/2200-5/40-	5	Wainwright GmbH	12 M	-	30.05.2011
067	coupling decoupling-network	CDN801-M2/M3	272	Lüthi	12 M	-	31.03.2011
068	coupling decoupling-network	CDN 801-M5	95226	Lüthi	12 M	-	31.03.2011
069	EM - clamp	EM101	9535159	Lüthi	36 M	-	31.03.2013
072	coupling decoupling-network	CDN801-M2/M3	276	Lüthi	12 M	-	31.03.2011
083	AC - power supply, 0-10 A	EAC/MT 27010	910502096	EURO TEST	pre-m	2	
084	AC - power supply, 0-5 A	ELABO-8-34214	-	ELABO	pre-m	2	
085	AC - power supply, 0-10 A	R250	-	Schunterm.&Benningh.	pre-m	2	
086	DC - power supply, 0 -10 A	LNG 50-10	-	Heinzinger Electronic	pre-m	2	
087	DC - power supply, 0 -5 A	EA-3013 S	-	Elektro Automatik	pre-m	2	
090	Helmholtz coil: 2x10 coils in series	-	-	RWTÜV	pre-m	4	
091	USB-LWL-Converter	OLS-1	007/2006	Ing. Büro Scheiba	-	4	
094	artificial head (No.1)	4905	1566990	Brüel & Kjaer	pre-m	2	
099	passive voltage probe	ESH2-Z3	299.7810.52	Rohde & Schwarz	36 M	-	31.03.2012
100	passive voltage probe	Probe TK 9416	without	Schwarzbeck	36 M	-	31.03.2012
110	USB-LWL-Converter	OLS-1	-	Extreme USB	-	4	
119	RT harmonics analyser/dig. flickermeter	B10	G60547	BOCONSULT	36 M	-	31.03.2013
121	notch filter GSM 1900	WRCB 1879,5/1880,5EE	15	Wainwright GmbH	12 M	-	30.05.2011
122	notch filter GSM 1800	WRCB 1747/1748	12	Wainwright GmbH	12 M	-	30.05.2011
131	RF-Current Probe	F-52	19	FCC	12 M	-	31.03.2011
134	horn antenna 18 GHz (Subst 2)	3115	9005-3414	EMCO	12 M	-	31.03.2011
136	adjustable dipole antenna (Dipole 1)	3121C-DB4	9105-0697	EMCO	12 M	-	31.03.2012
140	signal generator	SMHU	831314/006	Rohde & Schwarz	24 M	-	31.03.2012
248	attenuator	SMA 6dB 2W	-	Radiall	pre-m	2	
249	attenuator	SMA 10dB 10W	-	Radiall	pre-m	2	
252	attenuator	N 6dB 12W	-	Radiall	pre-m	2	
254	high pass GSM1800/1900/DECT	5HC 2600/12750-1.5KK	23042	Trilithic	12 M	-	30.05.2011
256	attenuator	SMA 3dB 2W	-	Radiall	pre-m	2	
257	hybrid	4031C	04491	Narda	pre-m	2	
260	hybrid coupler	4032C	11342	Narda	pre-m	2	
261	thermal power sensor	NRV-Z55	825083/0008	Rohde & Schwarz	24/12 M	-	31.03.2012
262	power meter	NRV-S	825770/0010	Rohde & Schwarz	24 M	-	31.03.2012
263	signal generator	SMP 04	826190/0007	Rohde & Schwarz	36 M	-	31.03.2013
264	spectrum analyzer	FSEK 30	826939/005	Rohde & Schwarz	12 M	-	31.03.2011
265	peak power sensor	NRV-Z33, Model 04	840414/009	Rohde & Schwarz	24 M	-	31.03.2012
266	peak power sensor	NRV-Z31, Model 04	843383/016	Rohde & Schwarz	24 M	-	31.03.2012
268	AC/DC power supply	EA 3050-A	9823636	-	pre-m	2	
270	termination	1418 N	BB6935	Weinschel	pre-m	2	
271	termination	1418 N	BE6384	Weinschel	pre-m	2	
272	attenuator (20 dB) 50 W	Model 47	BF6239	Weinschel	pre-m	2	
273	attenuator, (10 dB) 100 W	Model 48	BF9229	Weinschel	pre-m	2	
274	attenuator (10 dB) 50 W	Model 47 (10 dB) 50 W	BG0321	Weinschel	pre-m	2	
275	DC-Block	Model 7003 (N)	C5129	Weinschel	pre-m	2	
276	DC-Block	Model 7006 (SMA)	C7061	Weinschel	pre-m	2	
279	power divider	1515 (SMA)	LH855	Weinschel	pre-m	2	
284	coupling decoupling network	CDN 801-M1	1661	Lüthi	12 M	-	31.03.2011
285	coupling decoupling network	CDN 801-S1	1642	Lüthi	12 M	-	31.03.2011
287	pre-amplifier 25MHz - 4GHz	AMF-2D-100M4G-35-10P	379418	Miteq	12 M	-	30.05.2011
290	notch filter GSM 900	WRCA 901,9/903,1SS	3RR	Wainwright GmbH	12 M	-	30.05.2011
291	high pass filter GSM 850/900	WHJ 2200-4EE	14	Wainwright GmbH	12 M	-	30.05.2011
296	audio measurement amplifier	2636C	R=316568/004	Brüel & Kjaer	18 M	-	31.03.2011
298	Univ. Radio Communication Tester	CMU 200	832221/091	Rohde & Schwarz	12 M	-	31.03.2011
299	audio microphone	134	-	Brüel & Kjaer	pre-m	2	
300	AC LISN (50 Ohm/50µH, 1-phase)	ESH3-Z5	892 239/020	Rohde & Schwarz	12 M	-	31.03.2011
301	attenuator (20 dB) 50W, 18GHz	47-20-33	AW0272	Lucas Weinschel	pre-m	2	
302	horn antenna 40 GHz (Meas 1)	BBHA9170	155	Schwarzbeck	36 M	-	31.03.2011

Ref.-No.	Equipment	Type	Serial-No.	Manufacturer	Interval of calibration	Remark	Cal due
303	horn antenna 40 GHz (Subst 1)	BBHA9170	156	Schwarzbeck	36 M	-	31.03.2011
304	fix dipole antenna 1,6 GHz	EMCO 3125-307	9907-1001	ETS	24/12 M	-	31.03.2011
305	fix dipole antenna 1,8-2,0 GHz	EMCO 3125-306	9907-1001	ETS	24/12 M	-	31.03.2011
306	fix dipole antenna 2,45 GHz	EMCO 3125-308	9907-1001	ETS	24/12 M	-	31.03.2011
307	fix dipole antenna 3 GHz	EMCO 3125-309	9907-1001	ETS	24/12 M	-	31.03.2011
317	1000 Hz calibrator 94 dB SPL	4230 94dB	1542286	Brüel & Kjaer	12 M	-	31.03.2011
323	Communication Tester	CMD 055	825878/0034	Rohde & Schwarz	12 M	-	31.03.2011
331	climatic test chamber -40/+80 Grad	HC 4055	43146	Heraeus Vötsch	24 M	-	30.11.2012
335	System-CTC-EMS-Conducted	System EMS Conducted	-	Rohde & Schwarz	12 M	5	31.07.2010
340	Univ. Communication Tester	CMD 55	849709/037	Rohde & Schwarz	24 M	-	31.03.2012
341	digital multimeter	Fluke 112	81650455	Fluke	24 M	-	31.03.2012
342	digital multimeter	Voltcraft M-4660A	IB 255466	Voltcraft	24 M	-	31.03.2011
344	adaptor 150/50 Ohm	150/50	-	Krohne	12 M	-	31.03.2011
345	adaptor 150/50 Ohm	150/50	-	Krohne	12 M	-	31.03.2011
347	laboratory site	radio lab.	-	-	-	3	
348	laboratory site	EMI conducted	-	-	-	3	
349	car battery 12 V	car battery 12 V	without	-	-	3	
350	car battery 12 V	car battery 12 V	without	-	-	3	
354	DC - power supply 40A	NGPE 40/40	448	Rohde & Schwarz	pre-m	-	
355	power meter	URV 5	891310/027	Rohde & Schwarz	12 M	-	31.03.2011
356	power sensor	NRV-Z1	882322/014	Rohde & Schwarz	24 M	-	31.03.2011
357	power sensor	NRV-Z1	861761/002	Rohde & Schwarz	24 M	-	31.03.2011
365	10V Insertion Unit 50 Ohm	URV5-Z2	100880	Rohde & Schwarz	24 M	-	31.03.2012
366	Ultra Compact Simulator	UCS 500 M4	V0531100594	EM-Test	12 M	-	01.04.2011
367	audio measurement amplifier	2636	316832/001	Brüel & Kjaer	12 M	-	31.03.2011
369	insertion unit (SAR-EMS, Ch. A)	URV5-Z2	100301	Rohde & Schwarz	24 M	-	31.03.2011
370	insertion unit (SAR-EMS, Ch. B)	URV5-Z2	100302	Rohde & Schwarz	24 M	-	31.03.2011
371	Bluetooth Tester	CBT32	100153	R&S	12 M	-	31.03.2011
373	V-Network 5µH/50 Ohm	ESH3-Z6	100535	Rohde & Schwarz	12 M	-	31.03.2011
374	power amplifier 0,8-3 GHz	60S1G3	306528	Amplifier Research	-	1a	30.05.2011
375	directional coupler	DC7144M1	306498	Amplifier Research	-	1a	30.05.2011
376	horn antenna 6 GHz	BBHA9120 E	BBHA 9120 E 179	Schwarzbeck	12 M	-	01.04.2011
377	emi test receiver	ESCS 30	100160	Rohde & Schwarz	12 M	-	31.03.2011
378	broadband RF field monitor	RadiSense III	03D00013SNO-08	DARE B.V.	12 M	-	31.03.2011
383	signal generator	SME 03	842 828 /034	Rohde & Schwarz	36 M	-	31.03.2013
386	coupling decoupling network	CDN USB/p	19397	Schaffner	12 M	-	31.03.2011
387	coupling decoupling network	CDN L-801 M2	2051	Lüthi	12 M	-	31.03.2011
388	coupling decoupling network	CDN L-801 T2	1929	Lüthi	12 M	-	31.03.2011
389	digital multimeter	Keithley 2000	0583926	Keithley	24 M	-	31.03.2011
390	Industry Acoustic System	MO 2000 Set	2127100123	Sennheiser	-	4	
392	Radio Communication Tester	MT8820A	6K00000788	Anritsu	12 M	-	31.03.2011
394	power amplifier 80-1000 MHz	BLWA 0810-250/200	045610	Bonn-Elektronik	-	1a	30.05.2011
399	Sound Calibrator	Sound Calibrator 4231	2665101	Bruel & Kjaer	12 M	-	31.03.2011
400	ferrite tube (>15 dB, EN 55022)	FTC 40 X 15 E	5559	Lüthi	36 M	-	31.03.2012
401	ferrite tube (>15 dB, EN 55022)	FTC 40 X 15 E	5560	Lüthi	36 M	-	31.03.2012
431	Model 7405	Near-Field Probe Set	9305-2457	EMCO	-	4	
439	UltraLog-Antenna	HL 562	100248	Rohde + Schwarz	12 M	-	30.04.2011
440	CDN for Datacable	CDN-UTP	CDN-UTP 029	EMC Partner AG,	24 M	-	31.03.2012
441	System CTC-SAR-EMI Cable Loss	System EMI field (SAR)	-	ETS	12 M	5	31.08.2011
442	System CTC-SAR-EMS	System EMS field (SAR)	-	ETS-	12 M	5	30.04.2011
443	System CTC-FAR-EMI-Spuri	System CTC-FAR-EMI-	-	ETS-Lindgren/Cetecom	12 M	5	30.06.2011
444	System CTC_FAR-EMS	System EMS-Field (FAR)	-	ETS Lindgren/Cetecom	12 M	5	30.05.2011
448	notch filter WCDMA_FDD II	WRCT 1850.0/2170.0-	5	Wainwright Instruments	12 M	1c	30.05.2011
449	notch filter WCDMA FDD V	WRCT 824.0/894.0-5/40-	1	Wainwright Instruments	12 M	1c	30.05.2011
454	Oscilloscope	HM 205-3	9210 P 29661	Hameg	-	4	
455	Oscilloscope	HP 54602B	US 350 336 45	Hawlett Packard	-	4	
456	DC-Power supply 0-5A	EA 3013 S	207810	Elektro Automatik	pre-m	2	
459	DC -power supply 0-5 A , 0-32 V	EA-PS 2032-50	910722	Elektro Automatik	pre-m	2	
460	Univ. Radio Communication Tester	CMU 200	108901	Rohde & Schwarz	12 M	-	31.03.2011
462	AF-Generator	MX-2020	-	Conrad	-	4	
463	Universal source	HP3245A	2831A03472	Agilent	-	4	
466	digital multimeter	Fluke 112	89210157	Fluke USA	24 M	-	31.03.2012
467	digital multimeter	Fluke 112	89680306	Fluke USA	24 M	-	31.03.2012
468	digital multimeter	Fluke 112	90090455	Fluke USA	24 M	-	31.03.2012
477	ReRadiating GPS-System	AS-47	-	Automotive Cons. Fink	-	3	
480	power meter (Fula)	NRVS	838392/031	Rohde & Schwarz	24 M	-	31.03.2011
482	filtermatrix	FilterMatrix SAR 1	-	CETECOM (Brl)	-	1d	
484	pre-amplifier 2,5 - 18 GHz	AMF-5D-02501800-25-	1244554	Miteq	12 M	-	01.06.2011
487	System CTC NSA-Verification SAR-EMI	System EMI field (SAR)	-	ETS	12 M	-	30.09.2011
489	emi test receiver	ESU40	1000-30	Rohde & Schwarz	12 M	-	31.03.2011
491	ESD Simulator dito	ESD dito	dito307022	EM-Test	24 M	-	31.03.2011
498	Power Supply	NGPE 40/40	402	Rohde & Schwarz	-	2	
500	industry Acoustic System	MO 2000 Set	100048	Sennheiser	-	4	
502	band reject filter	WRCG 1709/1786-	SN 9	Wainwright	-	2	
503	band reject filter	WRCG 824/849-814/859-	SN 5	Wainwright	-	2	
517	relais switc matrix	HF Relais Box Keithley	SE 04	Keithley	-	2	
523	Digitalmultimeter	L4411A	MY46000154	Agilent	24 M	-	31.03.2011
524	Voltage Drop Simulator	VDS 200	0196-16	EM Test	24 M	-	31.03.2011
525	Koppelnetzwerk	CNA 200	1196-01	EM Test	24 M	-	31.03.2011
526	Burst Generator	EFT 200 A	0496-06	EM Test	24 M	-	31.03.2011
527	Micro Pulse Generator	MPG 200 B	0496-05	EM Test	24 M	-	31.03.2011
528	Load Dump Simulator	LD 200B	0496-06	EM Test	24 M	-	31.03.2011
529	6 dB Broadband resistive power divider	Model 1515	LH 855	Weinschel			
530	10 dB Broadband resistive power attenuator	R 416110000	LOT 9828	-			

Ref.-No.	Equipment	Type	Serial-No.	Manufacturer	Interval of calibration	Remark	Cal due
533	Impedance Stabilization Network	ISN T200A	25706	Teseq	12 M	-	31.03.2011
534	Impedance Stabilization Network	ISN T400A	Teseq	12 M	-	31	
535	Impedance Stabilization Network	ISN T800	26321	Teseq	12 M	-	31.03.2011
536	Impedance Stabilization Network	ISN ST08	25867	Teseq	12 M	-	31.03.2011
541	Impedance Stabilization Network	ISN T8-Cat6	26373	Teseq Berlin	12 M	-	31.03.2011
547	Univ. Radio Communikation Tester	CMU 200	835390/014	Rohde & Schwarz	12 M	-	31.03.2011
548	Digital-Barometer	GBP 2300	without	Greisinger GmbH	36/12 M	-	31.03.2012
549	Log.Per-Antenna	HL025	1000060	Rohde & Schwarz	36/12 M	-	31.03.2012
552	high pass filter 2,8-18GHz	WHKX 2.8/18G-10SS	4	Wainwright	12 M	-	30.06.2011
558	System CTC FAR S-VSWR	System CTC FAR S-	-	CTC	24 M	-	31.08.2011
574	Biconilog Hybrid Antenna	BTA-L	980026L	Frankonia	36/12 M	-	30.03.2013
584	Spectrum Analyzer	FSU 8	100248	Rohde & Schwarz	12 M	-	31.03.2012
592	CDN-HDMI	CDN-HDMI	A3029004	Frankonia / Dr.Hubert	12 M	-	31.03.2011
594	Communikation Tester	CMW500	101757	Rohde & Schwarz	24 M	-	31.03.2012
595	Analog Adder	TS8910	-	Rohde & Schwarz	pre-m	-	
598	Spectrum Analyser	FSEM 30	831259/013	Rohde & Schwarz	12 M	-	13.01.2011
436	Universal Radiocommunikation Tester	CMU 200	103083	Rohde & Schwarz	12 M	-	31.03.2011

8.1.3. Legend

Note / remarks		Calibrated during system calibration:
	1a	System CTC-SAR-EMS (Ref.-No. 442)
	1b	System-CTC-EMS-Conducted (Ref.-No. 335)
	1c	System CTC-FAR-EMI-spurious emission (Ref.-No . 443)
	1d	System CTC-SAR-EMI (Ref.-No . 441)
	1e	System CTC-OATS (EMI radiated) (Ref.-No. 337)
	1 f	System CTC-CTIA-OTA (Ref.-No . 420)
	1 g	System CTC-FAR-EMS (Ref.-No . 444)
	2	Calibration or equipment check immediately before measurement
	3	Regulatory maintained equipment for functional check or support purpose,
	4	Ancillary equipment without calibration e.g. mechanical equipment or monitoring equipment
	5	Test System

Interval of calibration	12 M	12 month
	24 M	24 month
	36 M	36 month
	24/12 M	Calibration every 24 months, between this every 12 months internal validation
	36/12 M	Calibration every 36 months, between this every 12 months internal validation
	Pre-m	Check before starting the measurement
	-	Without calibration

9. Annex – Correction factors due to reduced meas. distance (f< 30 MHz)

The used correction factors when the measurement distance is reduced, are taken from IEEC Transaction EMC, Vol 47, No.3, Aug. 2005, Journal Paper *"EXTRAPOLATING NEAR-FIELD EMISSIONS OF LOW-FREQUENCY LOOP TRANSMITTERS"*.

Used Transducer factors (f < 30 MHz)					
1	2	3	4	5	6
					=2+3+4+5
Frequency	Antenna factor	Corection factor		Cable loss	Transducer factor
		300m to 3m	30m to 3m		
kHz	dB µV/m	dB	dB	dB	dB µV/m
9,0	20,0	-116,7		0,0	-96,7
10,6	20,0	-116,7		0,0	-96,7
12,6	20,0	-116,7		0,0	-96,7
14,8	20,0	-116,7		0,0	-96,7
17,5	20,0	-116,6		0,0	-96,6
20,7	20,0	-116,6		0,0	-96,6
24,4	20,0	-116,6		0,0	-96,6
28,9	20,0	-116,6		0,0	-96,6
34,1	20,0	-116,5		0,0	-96,5
40,3	20,0	-116,4		0,0	-96,4
47,6	20,0	-116,3		0,0	-96,3
56,2	20,0	-116,2		0,0	-96,2
66,4	20,0	-116,0		0,0	-96,0
78,4	20,0	-115,8		0,0	-95,8
92,7	20,0	-115,4		0,0	-95,4
109,4	20,0	-115,0		0,0	-95,0
129,3	20,0	-114,5		0,0	-94,5
152,7	20,0	-113,9		0,0	-93,9
180,4	20,0	-113,1		0,0	-93,1
213,1	20,0	-112,2		0,0	-92,2
251,7	20,0	-111,3		0,0	-91,3
297,3	20,0	-108,3		0,0	-88,3
351,2	20,0	-105,2		0,0	-85,2
414,8	20,0	-102,1		0,0	-82,1
490,0	20,0	-99,1		0,0	-79,1
490,0	20,0		-56,4	0,1	-36,3
582,0	20,0		-56,2	0,1	-36,1
690,0	20,0		-56,0	0,2	-35,8
820,0	20,0		-55,7	0,2	-35,5
973,0	20,0		-55,4	0,2	-35,2
1.155,0	20,0		-54,9	0,3	-34,6
1.371,0	20,0		-54,4	0,3	-34,1
1.627,0	20,0		-53,7	0,3	-33,4
1.931,0	20,0		-52,9	0,4	-32,5
2.292,0	20,0		-52,0	0,4	-31,6
2.721,0	20,0		-49,8	0,5	-29,3
3.230,0	20,0		-46,6	0,5	-26,1
3.834,0	20,0		-43,3	0,6	-22,7
4.551,0	20,0		-40,1	0,6	-19,5
5.402,0	20,0		-36,8	0,7	-16,1
6.412,0	20,0		-33,5	0,7	-12,8
7.612,0	20,0		-30,3	0,8	-9,5
9.035,0	20,0		-27,0	0,8	-6,2
10.725,0	20,0		-23,9	0,9	-3,0
12.730,0	20,0		-21,2	0,9	-0,3
15.111,0	20,0		-19,3	1,0	1,7
17.937,0	20,0		-18,4	1,0	2,6
21.292,0	20,0		-18,2	1,1	2,9
25.274,0	20,0		-18,3	1,1	2,8
30.000,0	20,0		-18,4	1,2	2,8