MOTORCYCLE TRANSMITTER SCHEMATIC
(27.145MHz)

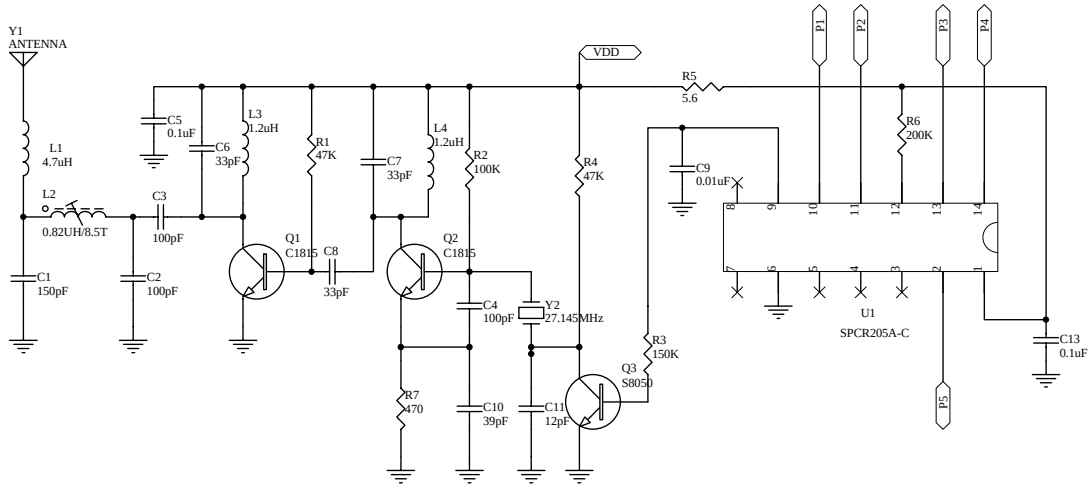

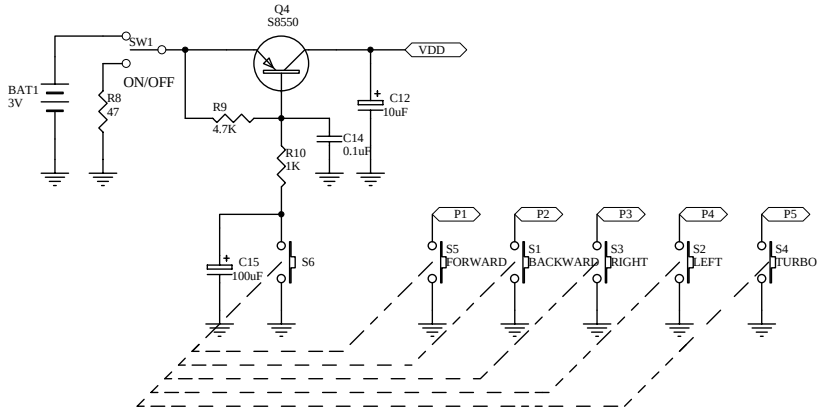

Description	Motorcycle		
Supplier	WEINA	Version	
Date	2005-07-28	Form NO.	
Designed By	xm	Approved By	