VEHICLE ACCESS CONTROL SYSTEM
IGNITION CONTROL MODULE BLOCK DIAGRAM
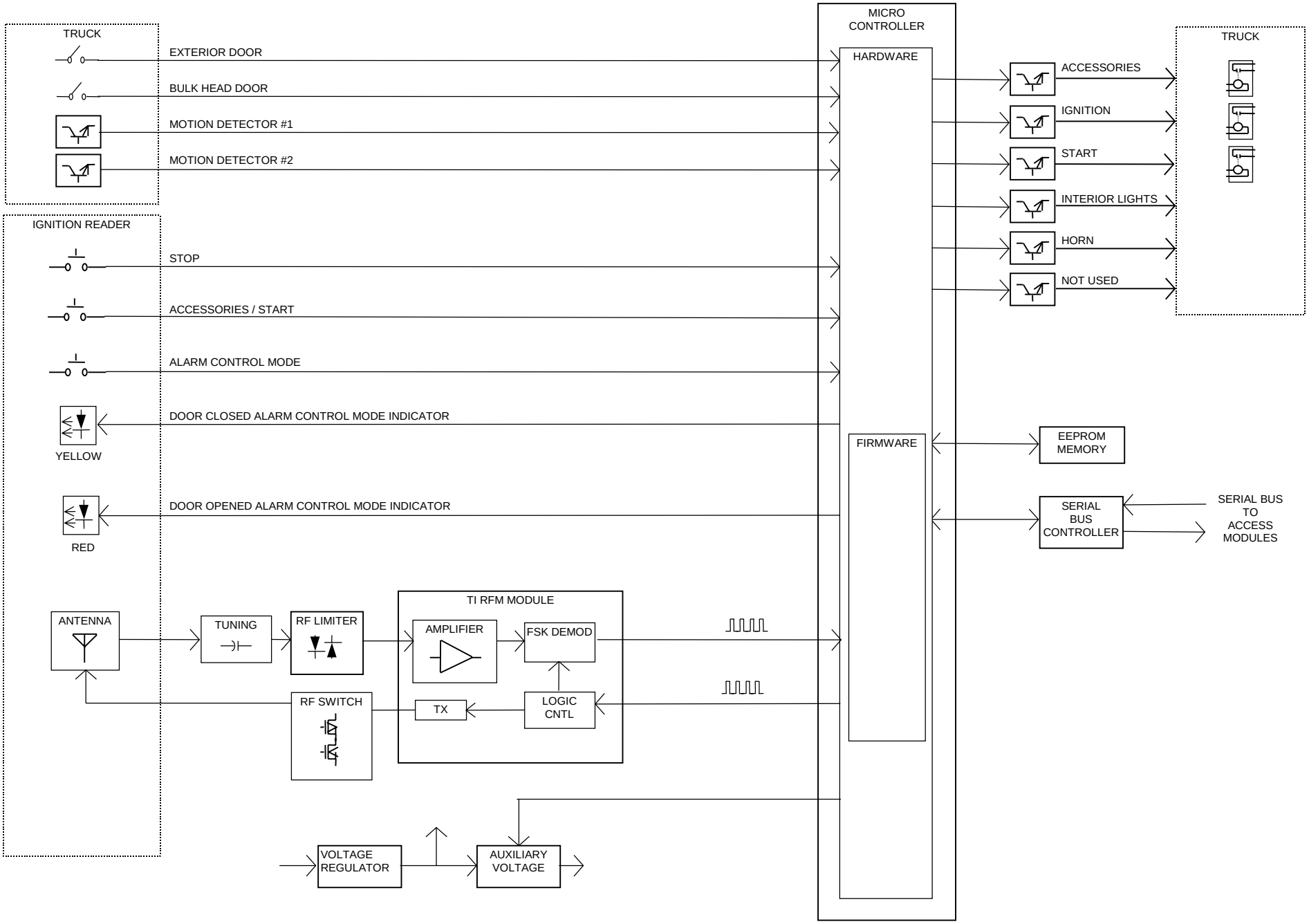
March 13, 1999