SYM.	SHT.	ZONE	REASON AND DESCR

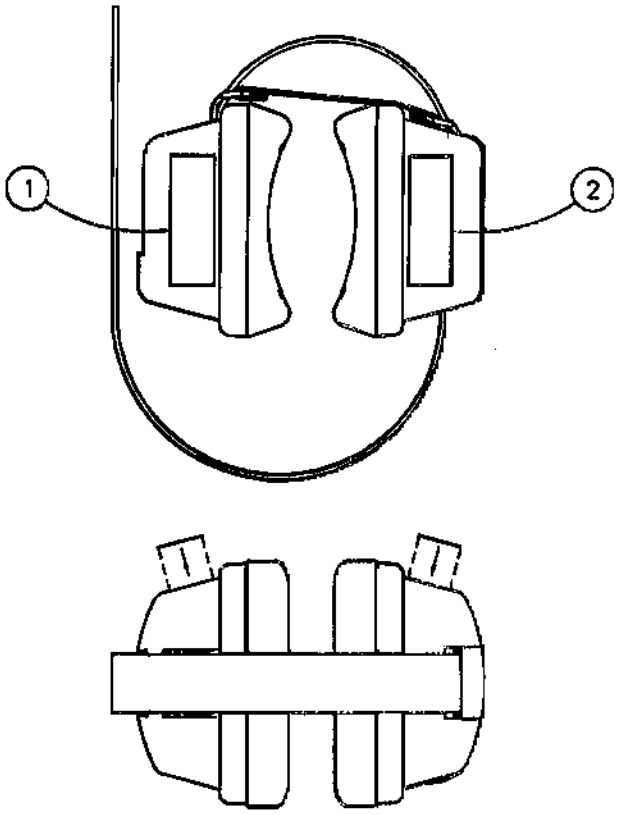

SCRAM BRACELET

This document contains proprietary information of Alcohol Monitoring Systems, LLC. It is submitted in confidence for the express purpose stated in AMS RFQ/PO only and may not, in whole or in part, be reproduced or used in any other purpose, or disclosed to others, without written authorization from Alcohol

NOTES (UNLESS OTHERWISE SPECIFIED)

FRACTIONS ±1 ANGLES ±0.5°, STRAIGHTNESS

DECIMALS .XX±.03 .XXX±.010 .XXXX±.0005

MACH 125 GRIND 32 LAP 1

BREAK ALL SHARP CORNERS

DO NOT SCALE DWG

DRAWN	GGS	DATE	4/2/02
ENGR		DATE	
CHKD		DATE	
APVD		DATE	