MOTO BUDS 085_WT_packaging 2021/07/05_v4.0_Add NRCan logo

Dark blue color reference PMS2965C

Light blue color reference PMS7700C

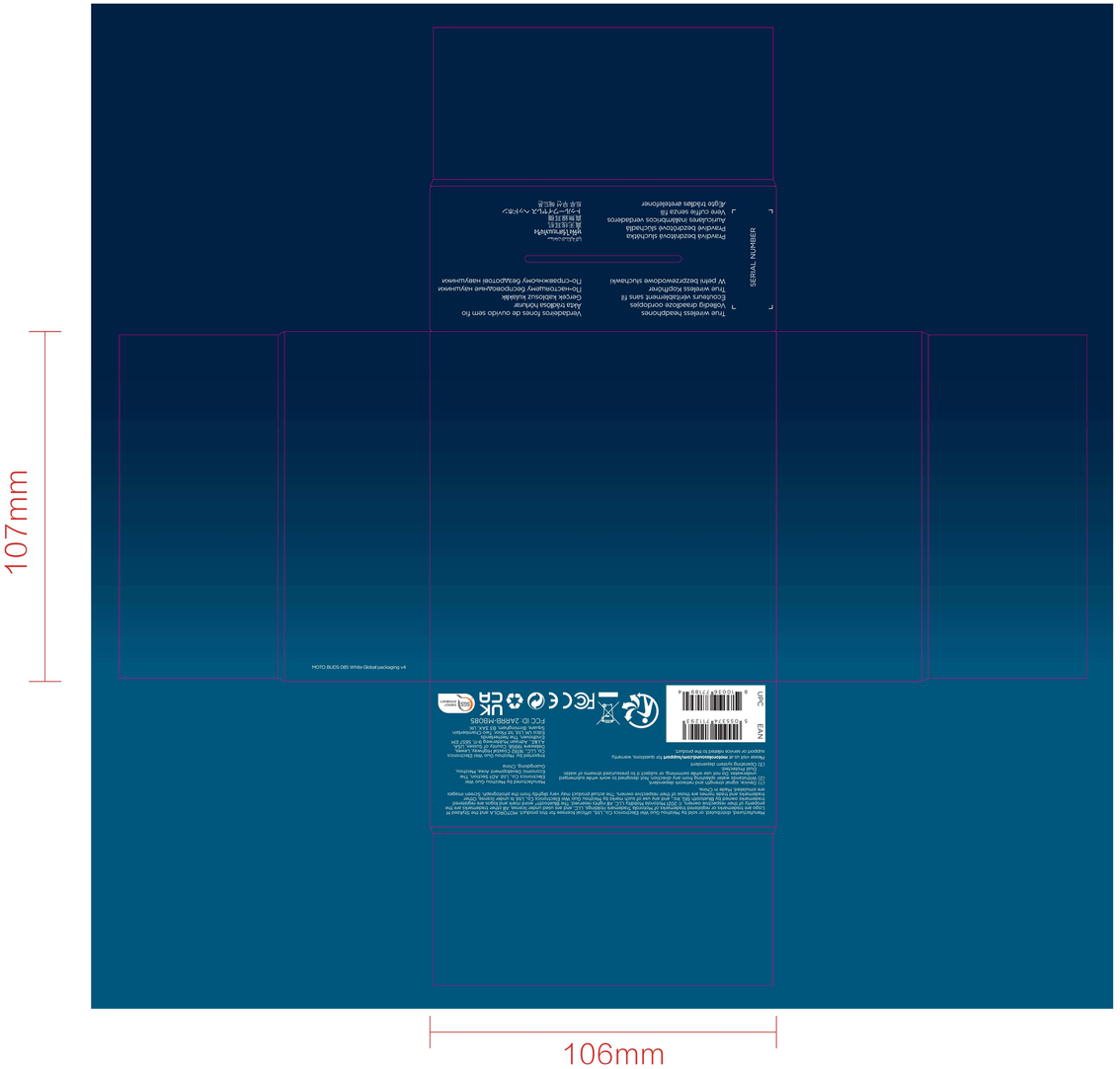
107mm
106mm
MOTO BUDS 085 White Global packaging v4
SERIAL NUMBER
True wireless headphones
Écouteurs véritablement sans fil
True wireless Kopfhörer
Vyvodný dvojdobrý ochrochlés
True wireless Kopfhörer
Vyvodný dvojdobrý slúchadlá
Auriculares inalámbricos verdaderos
Vere cuffie senza fili
Vyvodsnos Ronis de ouvido sem fio
Aqua tabdosi hotiyar
Gerçek kablosuz kulaklık
Πιστοποιημένη βεληνεκούμενη κεφαλόπτοια
Πιστοποιημένη βεληνεκούμενη κεφαλόπτοια
Manufactured distributed or sold by Motorola Mobility Canada Ltd. (MMCL) (Motorola) is not responsible for the product. MOTOROLA and the Stylized M logo are trademarks of Motorola Trademark Holdings, LLC. © 2021 Motorola Mobility LLC. All rights reserved. The Bluetooth word mark and logos are registered trademarks owned by Bluetooth SIG, Inc. and any use of such marks by Motorola Mobility Canada Ltd. (MMCL) is under license. Other trademarks are those of their respective owners. The actual product may vary slightly from the illustration shown images
Manufactured by Motorola Mobility Canada
Importer/Distributor: Motorola Mobility Canada
Guangdong, China
Electronic Development Area, Huizhou,
Electronics Co., Ltd. A&T Electronics Co., Ltd. Huizhou Guo Wei Electronics Co., Ltd.
Electronics Co., Ltd.
Electronics Co., Ltd.

MOTO BUDS 085_WT_packaging 2021/07/05_v4.0_Add NRCan logo

Dark blue color reference PMS2965C

Light blue color reference PMS7700C

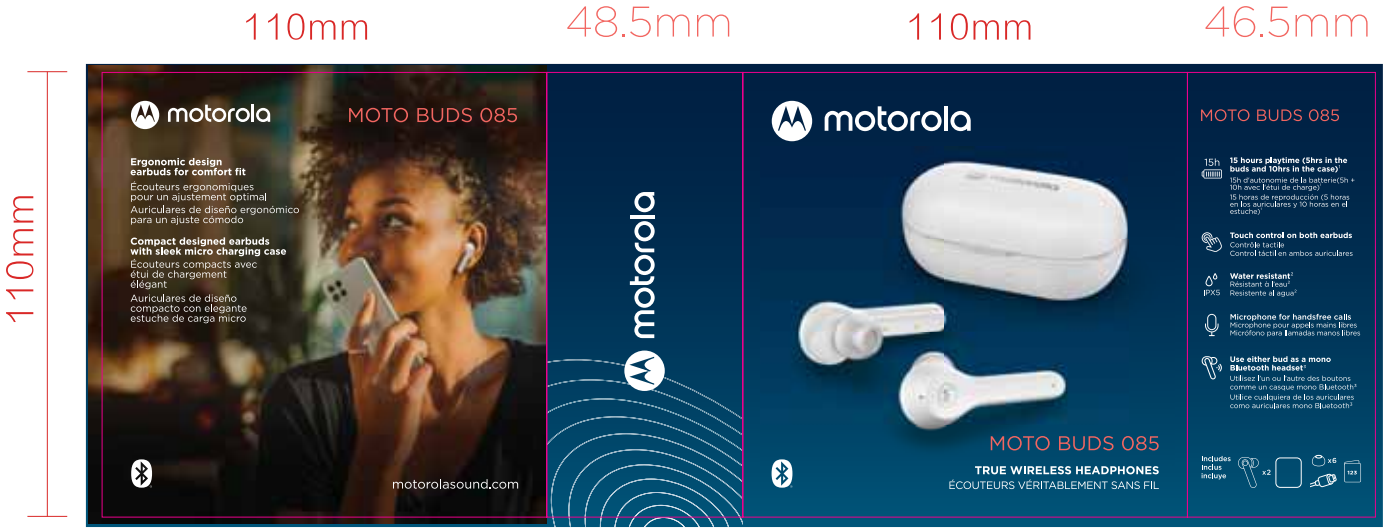

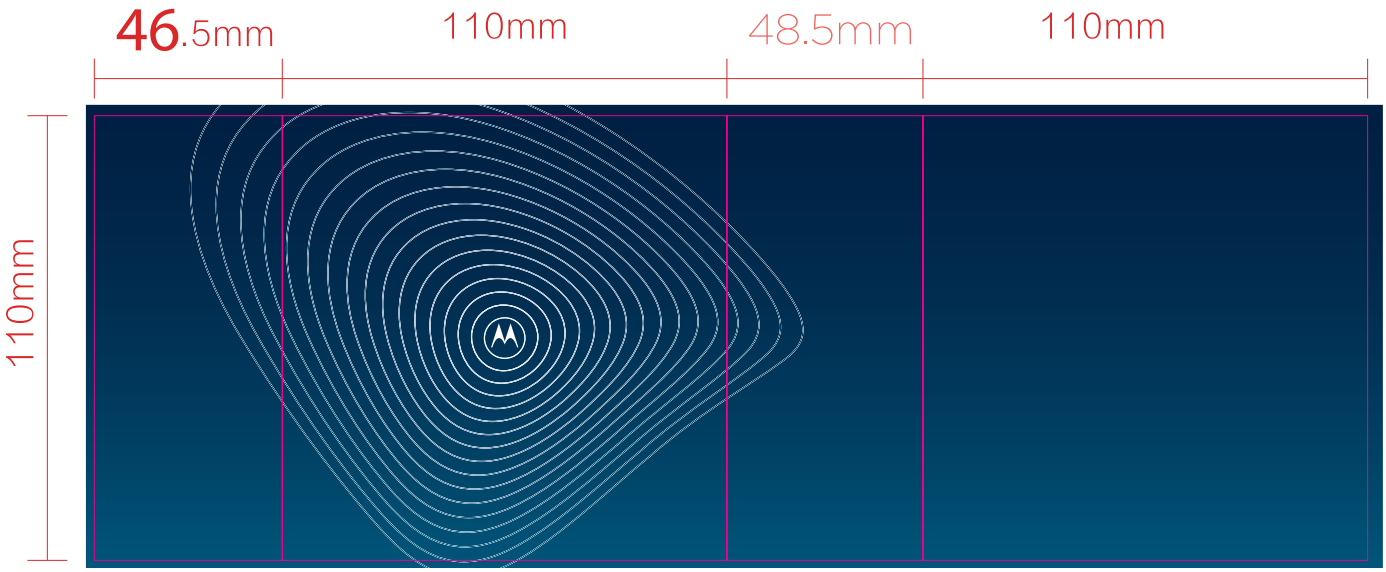

Inside outer box_PMS2965C

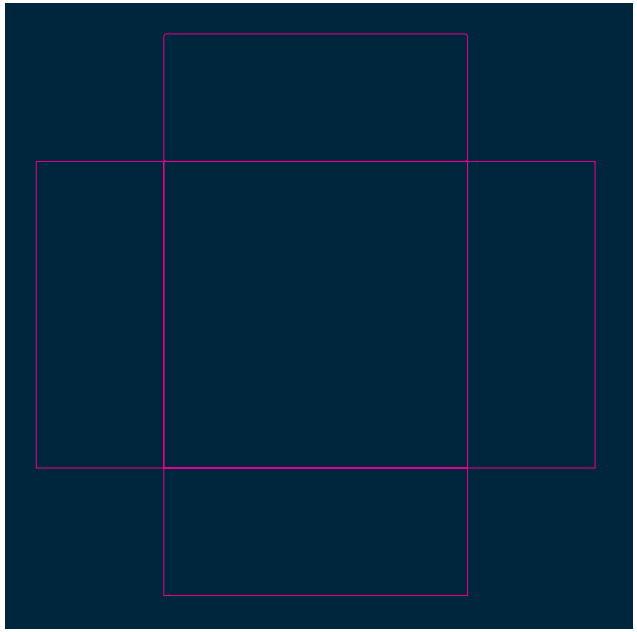

Inner paper tray_PMS2965C

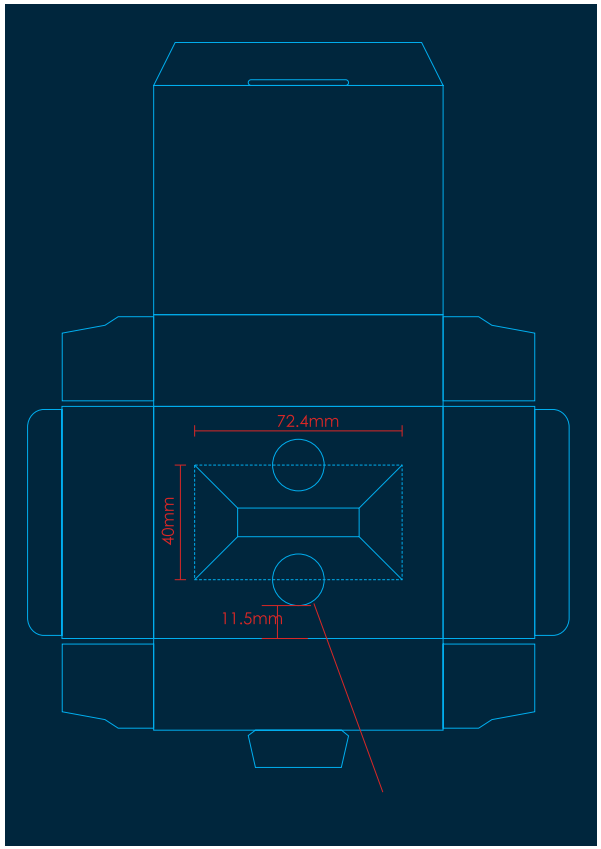
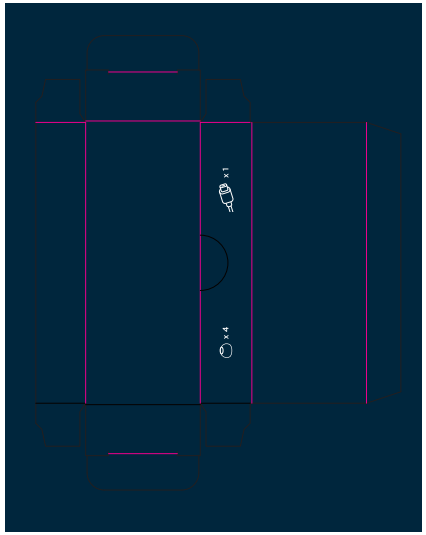
accessories box_PMS2965C