AWAN P/N	A8EEE-000002
SENAO P/N	7102A0558000

Rev.	ECN#	Description	Drawn/Date	Checked/Date	Approved/Date
X1		NEW RELEASE	Roy 05/12/22'	Louis 05/12/22'	Louis 05/12/22'

Brand Name: AWAN
Model Name: 7102A0558000
Antenna Type: Dipole

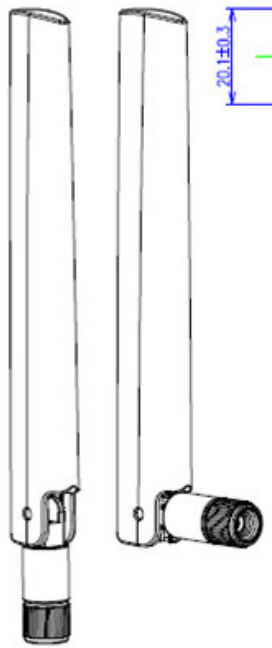

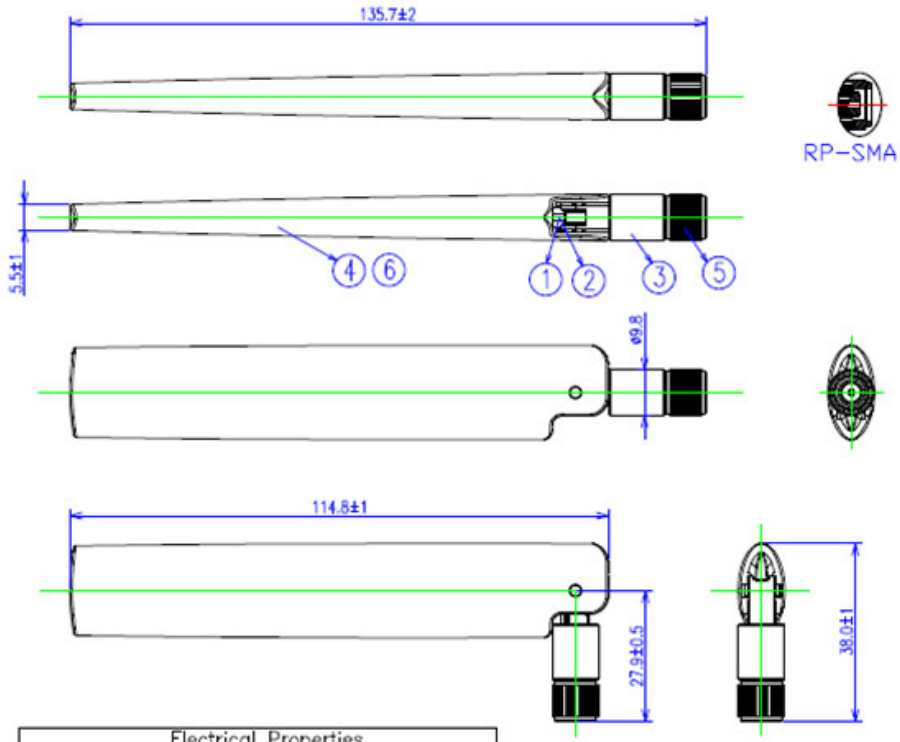

RP-SMA PLUG

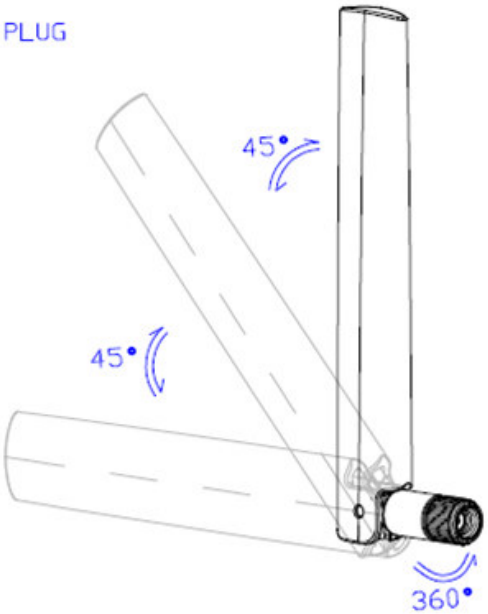

Electrical Properties	
Frequency	2400~2500 MHz 5150~5850 MHz
Impedance	50 Ohm Nominal
VSWR	< 2
Gain	2.4G~2.5G @ 3dBi±0.5dBi 5.15G~5.85G @ 5dBi±0.5dBi
Polarization	Linear
Mechanical Properties	
CASE	ABS
CONNECTOR	RPSMA
CASE COLOR	Black
Operating Temp	-30 ~ +65 °C
Waterproof level	[illegible]

Item	Name	Q'ty	Part #	Material / Finish
6	SPONGE	1		SPONGE
5	SMA(RPSMA)	1		COMM
4	Antenna Cover	1		ABS PA757
3	Antenna Base	1		PC/PBT ALLOY A724
2	RG178 CABLE	1		Cable
1	PCB	1		PCB

Drawn	Roy	Date	05/12/22'
Comp.	Roy	Date	05/12/22'
Checked	Louis	Date	05/12/22'
Approved	Louis	Date	05/12/22'
Scale	1 : 1	Sheet	1 of 1
Unit	mm		
Customer Drawing			

AWAN ADVANCED WIRELESS & ANTENNA INC.

File: ADE-135DBB DIPOLE_ANT_HF

Series: A8EEE

Size: A3

Dwg No.: C-AFPD-50-01

Rev.: X1

HALOGEN FREE

Address : Rm. F, B2., No. 207-1, Sec. 3, Beixin Rd., Xindian Dist., New Taipei City , Taiwan (R.O.C.)

SHARE
YOUR
LIFE

AWAN Dipole_DB_band 135mm Report

ADVANCED WIRELESS & ANTENNA INC.

© 2021 AWAN Inc.

Antenna proposal and specification

Antenna Proposal	
Antenna type	•Dipole
Measurement data	
VSWR	•VSWR < 2
Peak Gain	•2.4 ~ 2.5 G 3dBi ± 0.5dBi •5.15 ~ 5.85G 5dBi ± 0.5dBi
Efficiency	•2.4 ~ 2.5 G 60 ~ 70 % •5.15 ~ 5.85G. 60 ~ 75 %

Return Loss

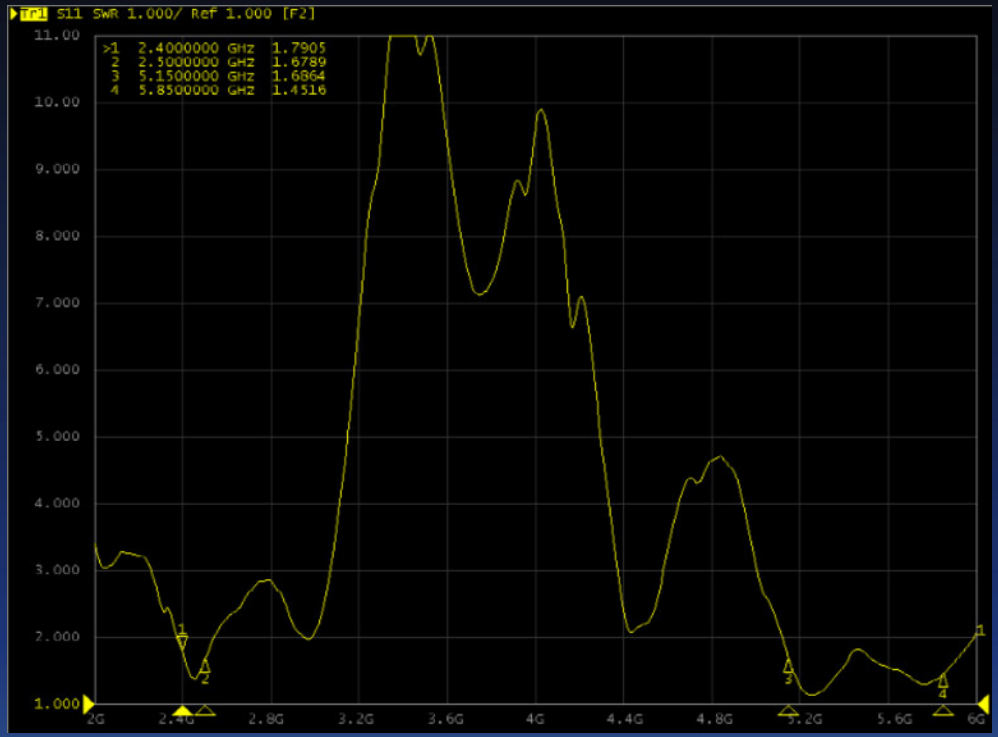
Tr1 S11 SWR 1.000/ Ref 1.000 [F2]
>1 2.4000000 GHz 1.7905
2 2.5000000 GHz 1.6789
3 5.1500000 GHz 1.6864
4 5.8500000 GHz 1.4516
11.00
10.00
9.000
8.000
7.000
6.000
5.000
4.000
3.000
2.000
1.000
2G
2.4G
2.8G
3.2G
3.6G
4G
4.4G
4.8G
5.2G
5.6G
6G

2D & 3D Radiation @2GHz

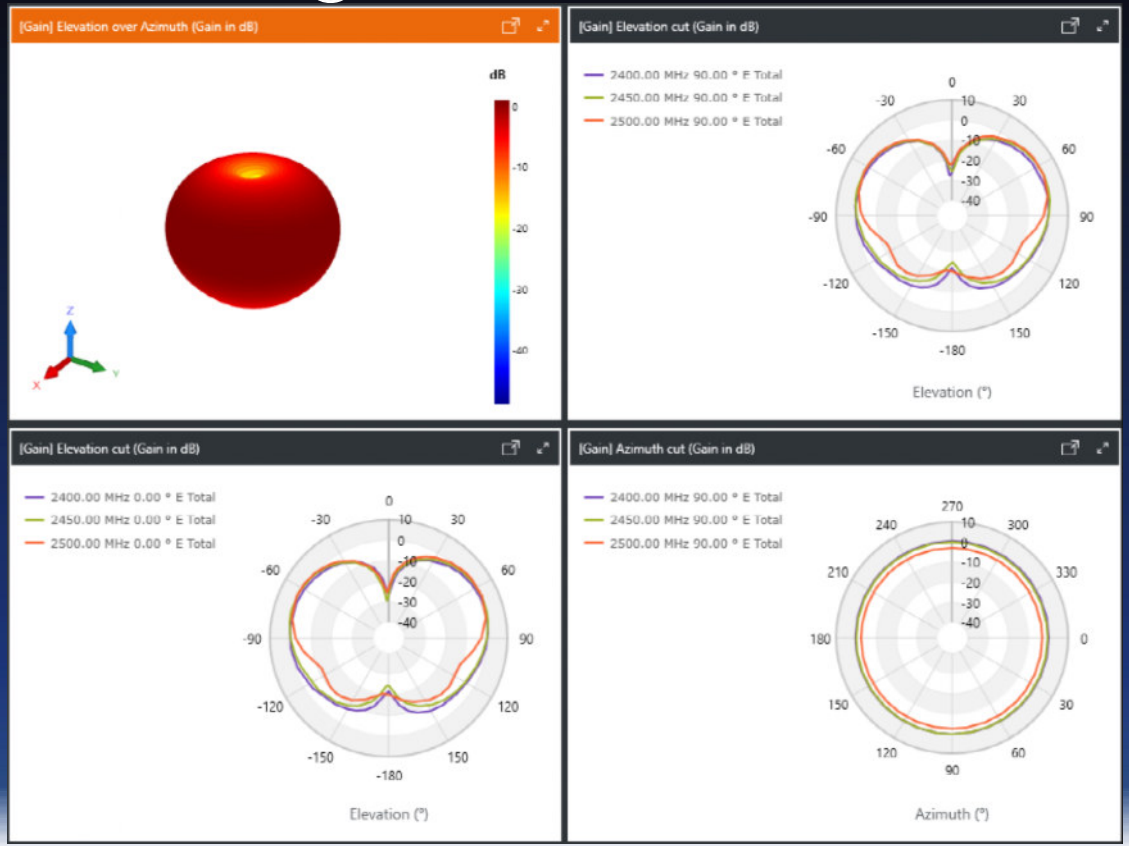

2D & 3D Radiation @5GHz

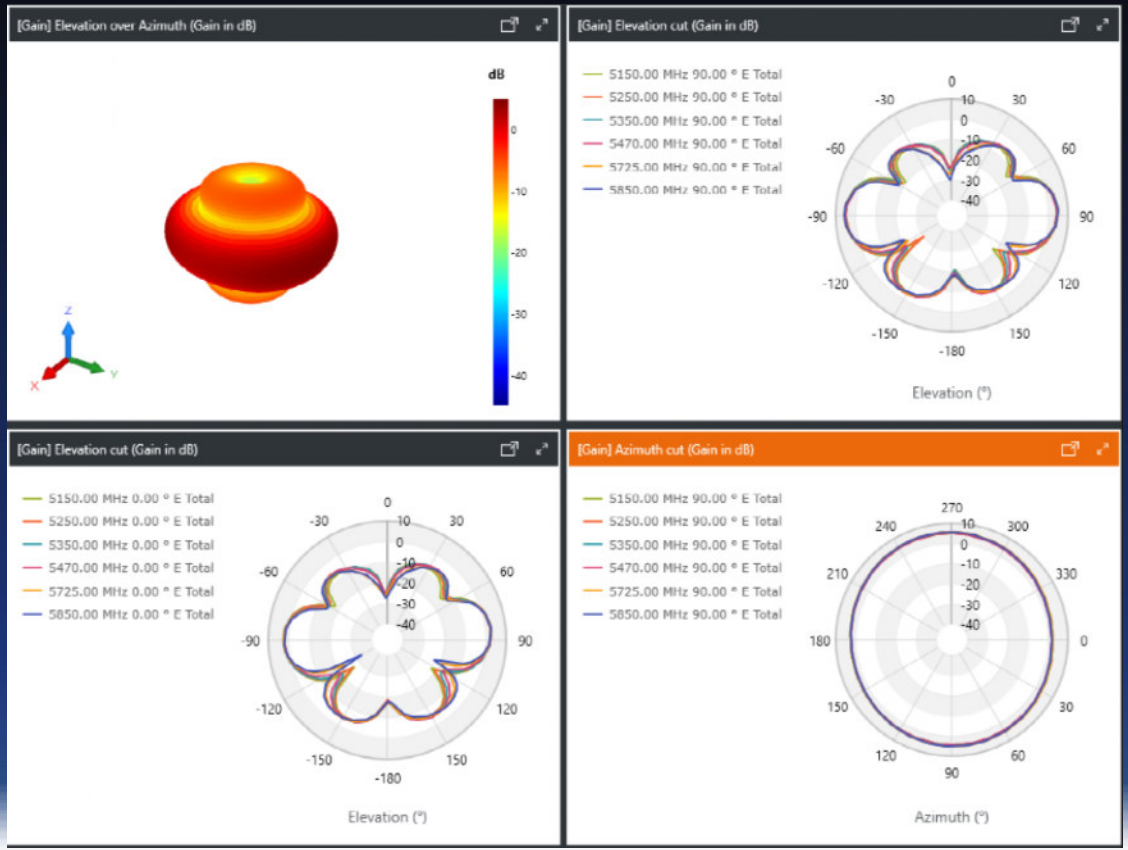

EFF. & Peak Gain

Frequency (MHz)	E-total (dBi)	Efficiency (dB)	Efficiency (%)
2400	2.85	-1.96	63.68
2450	2.97	-1.78	66.37
2500	2.73	-2.10	61.66
5150	4.45	-1.79	66.22
5250	4.61	-1.38	72.78
5350	4.97	-1.78	66.37
5470	4.85	-1.49	70.96
5725	4.86	-1.95	63.83
5850	4.71	-1.65	68.39