REV	CHANGE NO.	CHANGE DATE	DESCRIPTION OF CHANGE	SIGN
Rev. A				

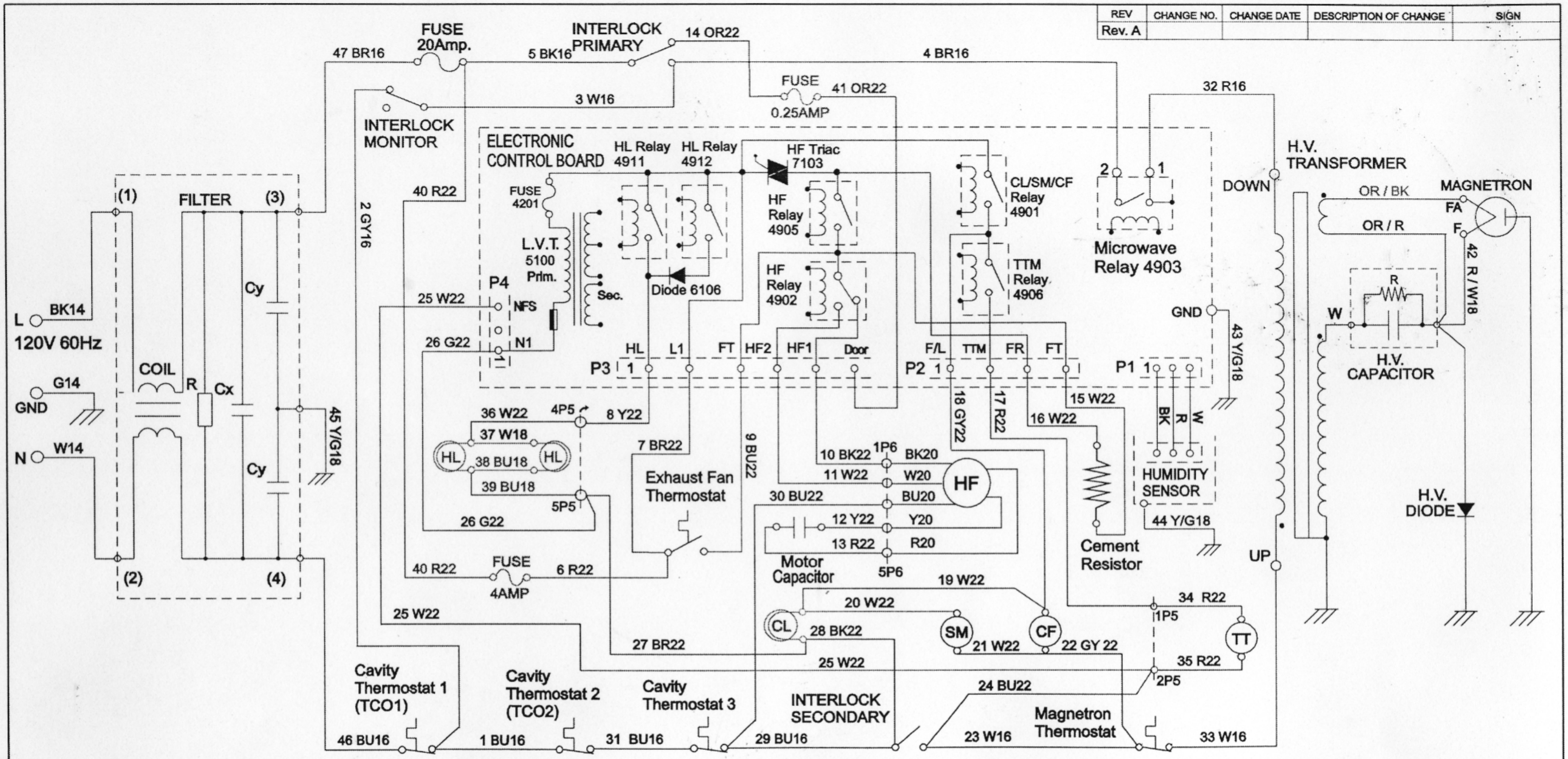

CONDITION: DOOR OPEN

SYMBOL NOTES

- CL — CAVITY LAMP
- HL — HOOD LAMP (COOKTOP LAMP)
- CF — COOLING FAN MOTOR
- HF — HOOD EXHAUST FAN MOTOR (BK20, W20, BU20, Y20, R20)
- TT — TURNTABLE MOTOR
- SM — STIRRER MOTOR

P1/P2/P3/P4/P5/P6: CONNECTORS

BK: BLACK	W: WHITE	BR: BROWN
BU: BLUE	G: GREEN	OR: ORANGE
R: RED	Y: YELLOW	GY: GRAY

1 BU16 — WIRE SIZE - AWG16
WIRE COLOR - BLUE
WIRE NO. - 1

RELEASE FOR:
- ☐ QUOTATION
- ☐ TOOL MAKING REQ. QTY. _____ PCS
- ☐ PURCHASING REQ. QTY. _____ PCS
- ☐ MODIFICATION REQ. QTY. _____ PCS
- ☐ UPDATE DWG.
- ☑ REFERENCE
- ☐ PRODUCTION

APP. BY _____
DATE _____

Whirlpool HOME APPLIANCES

Guangdong Whirlpool Electrical Appliances Co. , Ltd.

DESIGNER: Dal Xu Lei		TITLE: SCHEMATIC DIAGRAM	
DATE: Nov. 8, 2004			
FIRST USE MODEL NO: ARIES MH3184XP		DWG. NO. MU-080	
ASSEMBLE TO:		SCALE:	UNIT: A4
GENERAL TOLERANCES:		3rd PROJ	SHEET OF