GH3000
12/09/2002

Bottom of Handset:

22mm x 4mm

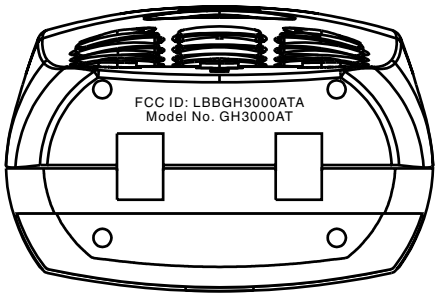

Bottom of Base Unit:
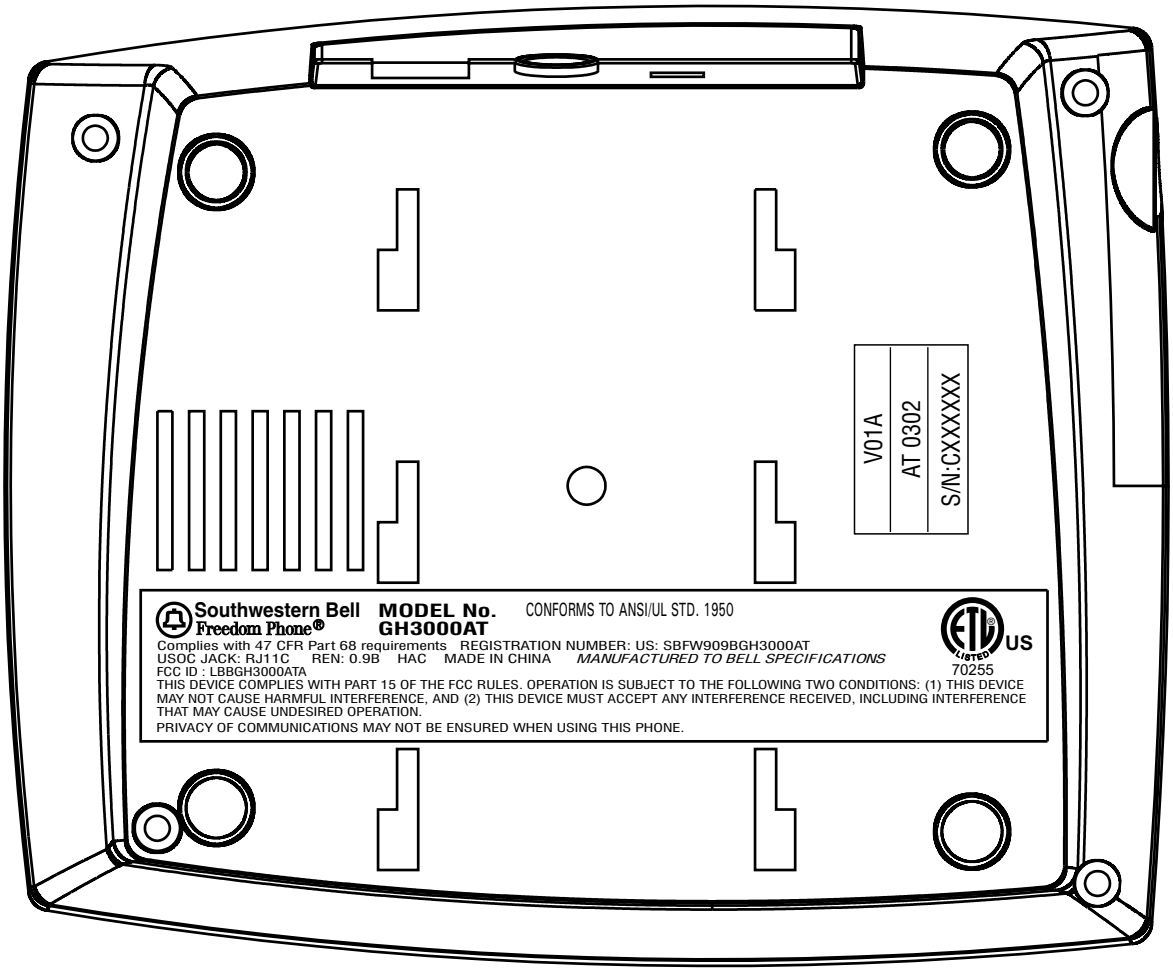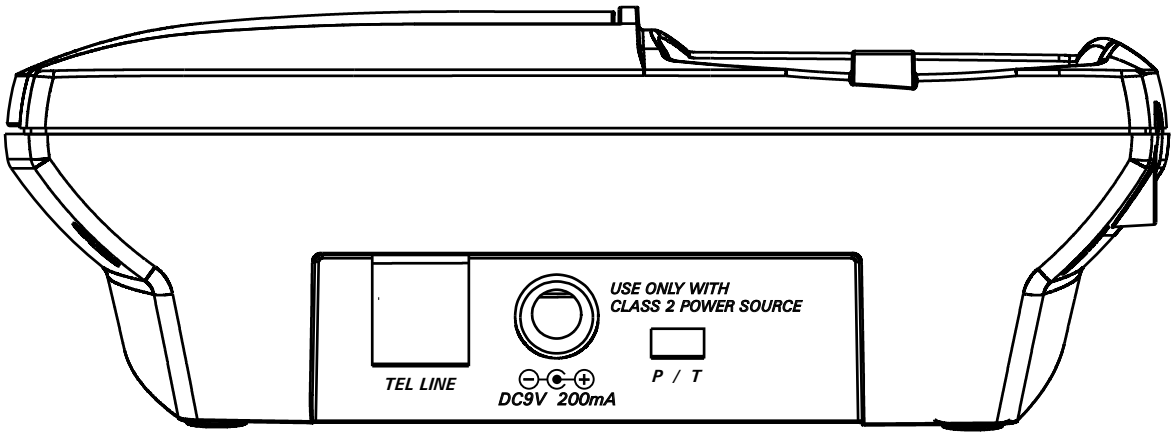
120mm x 20mm