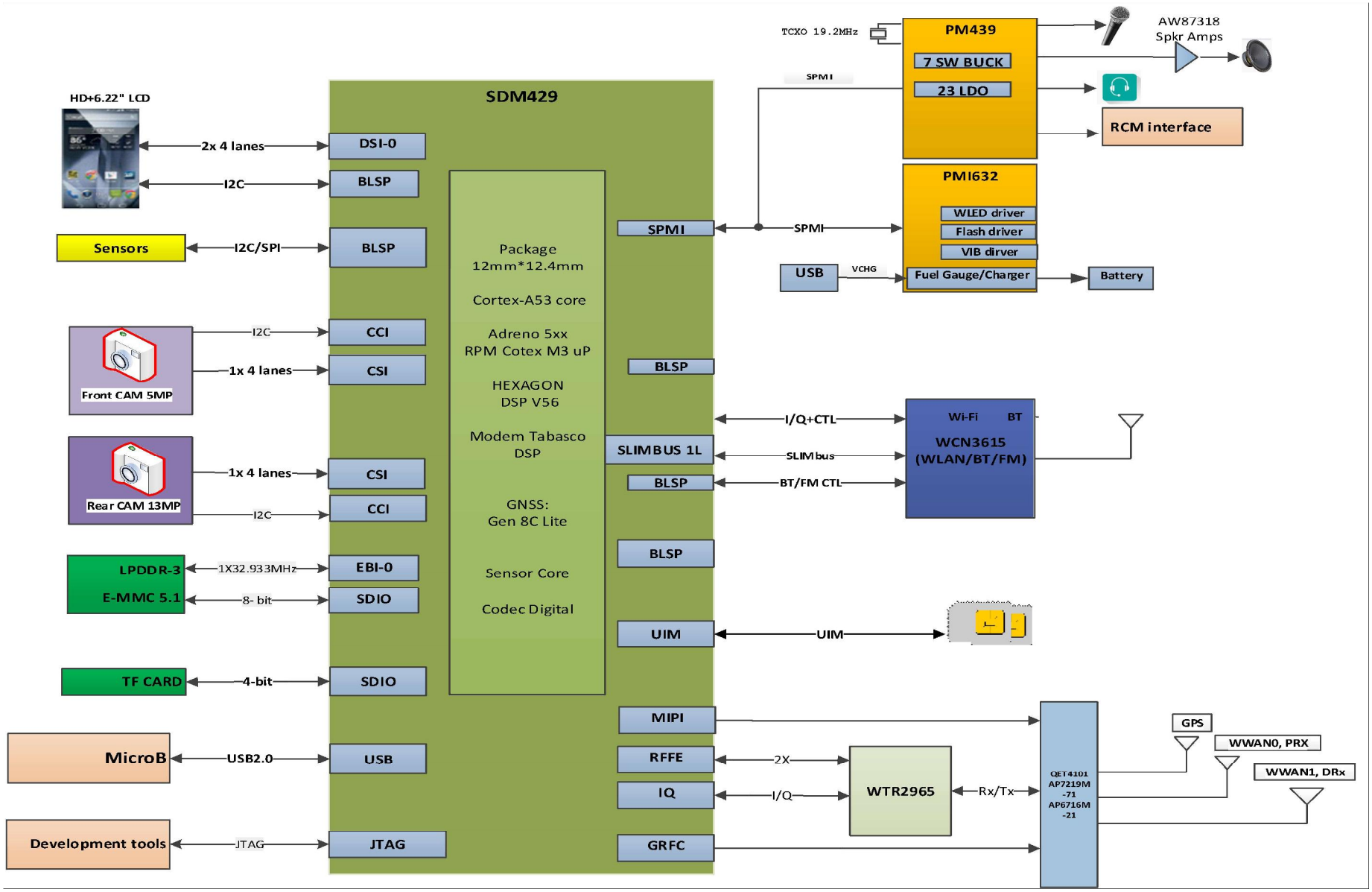

Block Diagram

Title	03.Block Diagram		REV: V10
DOCUMENT NO.:	89626_1_12 SKU1_HA1 TA1164		Size D
DEPARTMENT:	Wingtech-SZ	DESIGNER:	DESIGNER
WINGTECH			
Date:	Monday, March 25, 2019	Sheet 3 of 82	

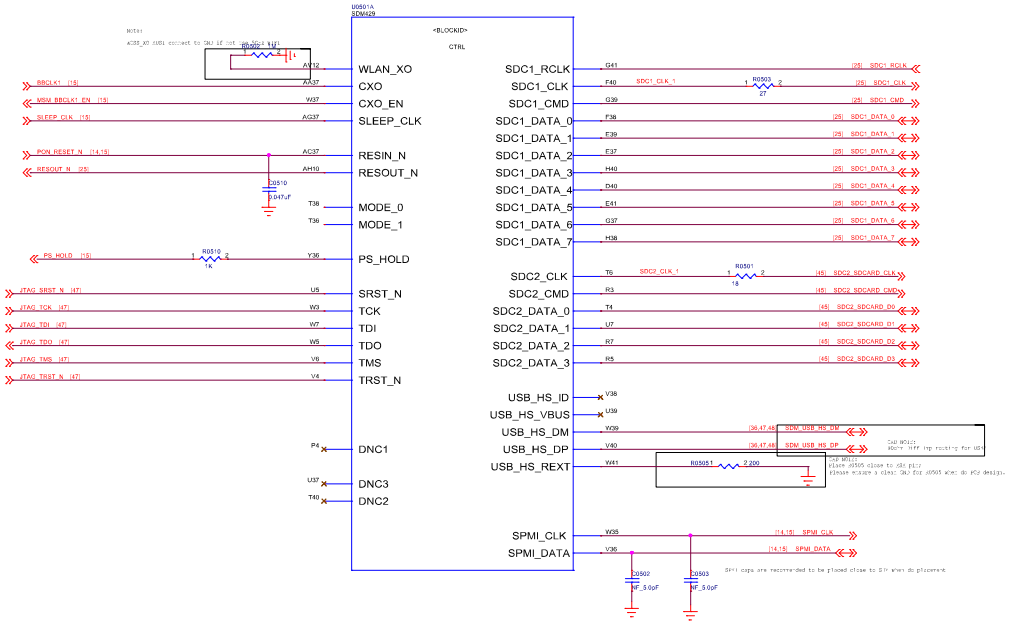

SDM429
Control

Title	05.SDM429		REV: V10
DOCUMENT NO.:	89626_1_12 SKU1_HA1 TA1164		Size D
DEPARTMENT:	Wingtech-SZ	DESIGNER:	DESIGNER
WINGTECH			
Date:	Monday, March 25, 2019	Sheet 5 of 82	

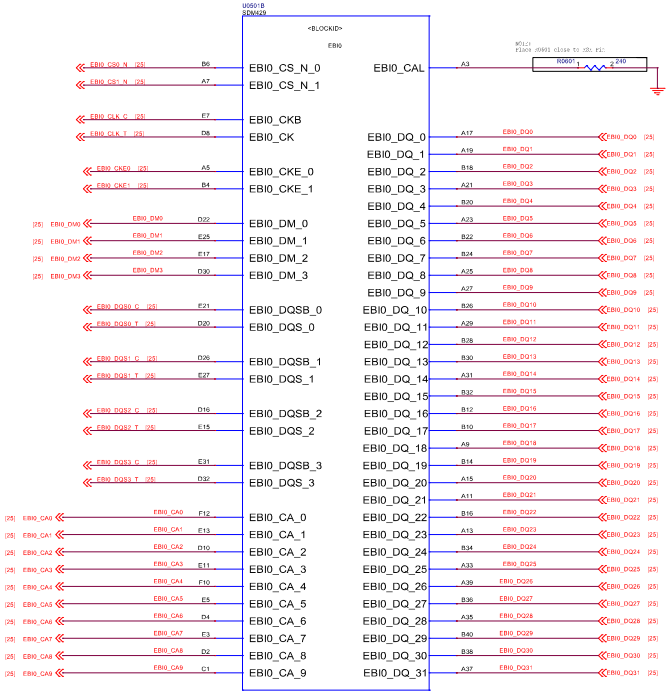

SDM429 EBI

Title	06.SDM429 EBI		REV: V10
DOCUMENT NO.:	89626_1_12 SKU1_HA1 TA1164		Size D
DEPARTMENT:	Wingtech-SZ	DESIGNER:	DESIGNER
Date:	Monday, March 25, 2019	Sheet 6 of 82	

NOTE:
Asterisks (*) indicate modem power management (MPM) wake-up pins

U950^E
SDM429

<BLOCKID>

GPIO

M4	GPIO_0	*	GPIO_67	BA13	[45] SD_CARD_DET
N7	GPIO_1 *		GPIO_68	AU9	
N5	GPIO_2		GPIO_69	AU21	[18] CDC_PDM_CLK
P6	GPIO_3	*	GPIO_70	AV22	[18] CDC_PDM_SYNC
M2	GPIO_4	*	GPIO_71	AWZ1	[18] CDC_PDM_TX
P2	GPIO_5 *	*	GPIO_72	AY20	[18] CDC_PDM_RX0
R1	GPIO_6	*	GPIO_73	BA21	[18] CDC_PDM_RX1
T2	GPIO_7	*	GPIO_74	BB20	[18] CDC_PDM_RX2
AY6	GPIO_8		GPIO_75	BB4	[77] BT_SSBI
AV6	GPIO_9 *		GPIO_76	BA3	[77] W/L CMD DATA 2
AV8	GPIO_10		GPIO_77	AY2	[77] W/L CMD DATA 1
AW7	GPIO_11		GPIO_78	AY4	[77] W/L CMD DATA 0
AV16	GPIO_12 *		GPIO_79	AW5	[77] W/L CMD SET
BA15	GPIO_13 *		GPIO_80	AW3	[77] W/L CMD CLK
AW15	GPIO_14	*	GPIO_81	AV1	[77] FM SSBI
AY14	GPIO_15		GPIO_82	AV4	[77] FM DATA
AW5	GPIO_16		GPIO_83	AV2	[77] BT CTL
AY10	GPIO_17 *		GPIO_84	AU3	[77] BT DATA
AW11	GPIO_18		GPIO_85	AV18	TP_SPI_MOSI [43]
AV10	GPIO_19	*	GPIO_86	AV20	TP_SPI_MISO [43]
AG41	GPIO_20		GPIO_87	AW19	TP_SPI_CS [43]
AG39	GPIO_21 *		GPIO_88	AU19	TP_SPI_CLK [43]
AH38	GPIO_22		GPIO_89	AY16	
AJ37	GPIO_23	*	GPIO_90	BB16	[42] Google key
BA5	GPIO_24	*	GPIO_91	V2	[46] KEY_VOL_UP_N
BA7	GPIO_25 *		GPIO_92	W1	
K2	GPIO_26	*	GPIO_93	BA19	
M6	GPIO_27		GPIO_94	AW17	
J7	GPIO_28 *		GPIO_95	BA17	
H2	GPIO_29		GPIO_96	AWZ3	
K4	GPIO_30	*	GPIO_97	BA23	
L5	GPIO_31 *		GPIO_98	BB22	
K6	GPIO_32		GPIO_99	AY22	
G3	GPIO_33		GPIO_100	AL37	[62,67,75] RFFE1_CLK
L1	GPIO_34 *		GPIO_101	AL39	[62,67,75] RFFE1_DATA
G1	GPIO_35 *		GPIO_102	AL41	[70] RFFE2_CLK
H4	GPIO_36 *		GPIO_103	AK40	[70] RFFE2_DATA
P36	GPIO_37 *		GPIO_104	AM40	[62] GRFC0_SEL
G5	GPIO_38 *		GPIO_105	AM38	[64] GRFC1_SEL
H6	GPIO_39		GPIO_106	AN39	[64] GRFC2_SEL
J5	GPIO_40		GPIO_107	AN37	[64] GRFC3_SEL
L39	GPIO_41 *		GPIO_108	AP40	[65] GRFC4_SEL
L37	GPIO_42 *		GPIO_109	AP38	[65] GRFC5_SEL
M36	GPIO_43 *		GPIO_110	AR41	[65] GRFC6_SEL
M38	GPIO_44 *		GPIO_111	AR39	[67] GRFC7_SEL
N37	GPIO_45 *		GPIO_112	AT40	[69] GRFC8_SEL
M40	GPIO_46 *		GPIO_113	AT38	[69] GRFC9_SEL
AH40	GPIO_47		GPIO_114	AP36	[72] GRFC10_SEL
P40	GPIO_48 *		GPIO_115	AR37	[73] GRFC11_SEL
AB38	GPIO_49		GPIO_116	AU39	[48] GRFC12_SEL
L3	GPIO_50 *		GPIO_117	AV38	[48] GRFC13_SEL
AB40	GPIO_51		GPIO_118	AV40	[79] EXT_GPS_LNA_EN
AC39	GPIO_52		GPIO_119	AW41	[59] CH0_GSM_TX_PHASE_D0
AC41	GPIO_53		GPIO_120	AW39	[59] RFFE5_CLK
AD38	GPIO_54 *		GPIO_121	AY40	[59] RFFE5_DATA
AD40	GPIO_55		GPIO_122	BA39	
AE39	GPIO_56		GPIO_123	BB38	
AF38	GPIO_57	*	GPIO_124	AK38	[43] FP_RST
AF40	GPIO_58 *		GPIO_125	BA9	
R39	GPIO_59 *	*	GPIO_126	BB8	
R41	GPIO_60	*	GPIO_127	AJ39	
Y40	GPIO_61 *	*	GPIO_128	AU11	
AA41	GPIO_62 *		GPIO_129	AY12	[47] BOARD_ID1
P38	GPIO_63 *	*	GPIO_130	BA11	
R37	GPIO_64		GPIO_131	K38	BOARD_ID2 [47]
BB12	GPIO_65 *		GPIO_132	L41	[47] BOARD_ID3
AY8	GPIO_66		GPIO_133	K40	[47] BOARD_ID4

UART_TX_2 [47]	
UART_RX_2 [47]	
LED_AUDIO_I2C_SDA [7,40]	
LED_AUDIO_I2C_SCL [7,40]	
TP_I2C_SDA [7,40]	
TP_I2C_SCL [7,40]	
LCD_ID1 [46]	
LCD_ID0 [46]	
SENSOR_I2C_SDA [7,44]	
SENSOR_I2C_SCL [7,44]	
AUDIO_I2C_SDA [7,82]	
AUDIO_I2C_SCL [7,82]	
LCD_TE [40]	
CAM_MCLK0 [41]	R0701 0 2 CAM_MCLK0_0
CAM_MCLK2 [41]	R0703 0 2
	C0702 1uF_33pF, C0703 1uF_33pF
CAM_I2C_SDA0 [7,41]	
CAM_I2C_SCL0 [7,41]	
CAM_I2C_SDA1 [7,41]	
CAM_I2C_SCL1 [7,41]	
FLASH_STROBE_NOW [14]	
CAM0_RST [41]	
FORCED_USB_BOOT [47]	
CAM2_RST [41]	
CAM_AF_VDD_EN [41]	
FP_VDD_EN [43]	
ACC_INT [44]	
PS_INT [40,44]	
SAR_EINT_N [44]	
DET_CARD [45]	
FP_INT [43]	
UIM_BATT_ALARM [15]	
CAM_DVDD_EN [41]	
UIM1_DATA [45]	
UIM1_CLK [45]	
UIM1_RST [45]	
UIM1_PRESENT [45]	
UIM2_DATA [45]	
UIM2_CLK [45]	
UIM2_RST [45]	
UIM2_PRESENT [45]	
LCD_RST [40]	
MIC_SDN [37]	
SPK_EN [37]	
TP_RST [40]	
TP_INT [40]	
BOARD_ID0 [47]	

GPIO_17	[43] TP_SPI_MOSI
GPIO_1	[43] TP_SPI_MISO
GPIO_11	[43] TP_SPI_CS
GPIO_10	[43] TP_SPI_CLK
GPIO_44	[43] TP_SPI_CS

GPIO_CONFIG[1:0]	GPIO_DIR
0b000	0 (I) -> 0 (I) -> HB(0.5)
0b001	0 (I) -> 0 (I)-> HB(0.5)
0b010	0 (I)-> HB(0.5)
0b011	HB(0.5)

Default Boot Config (0b000) in EXC1(mask2)

I2C PULL-UP RESISTORS

SENSORS

VREG_L6_1P8 [7,10,15,17,40,41,44]

R0705 2.2K, R0706 2.2K

SENSOR_I2C_SDA [7,44]
SENSOR_I2C_SCL [7,44]

CAMERAS

VREG_L6_1P8 [7,10,15,17,40,41,44]

R0709 2.2K, R0710 2.2K

CAM_I2C_SDA0 [7,41]
CAM_I2C_SCL0 [7,41]

CAMERAS

VREG_L6_1P8 [7,10,15,17,40,41,44]

R0718 2.2K, R0719 2.2K

CAM_I2C_SDA1 [7,41]
CAM_I2C_SCL1 [7,41]

TOUCHSCREEN

VREG_L5_1P8 [7,10,15,17,40,44]

『TP_IOVDD保持一致，符規格书确认』

R0711 2.2K, R0712 2.2K

TP_I2C_SDA [7,40]
TP_I2C_SCL [7,40]

VREG_L5_1P8 [7,10,14,17,18,35,43,45,47,62,67,70,75,77,82]

R0713 2.2K, R0714 2.2K

AUDIO_I2C_SDA [7,82]
AUDIO_I2C_SCL [7,82]

VREG_L5_1P8 [7,10,14,17,18,35,43,45,47,62,67,70,75,77,82]

R0721 2.2K, R0720 2.2K

LED_AUDIO_I2C_SDA [7,40]
LED_AUDIO_I2C_SCL [7,40]

SDM429 GPIO

NOTE:
Ensure SW sets these GPIOs (Sensor, CTP and Camera I2C bus) to inout pull down when the peripherals are powered off to eliminate leakage.

Title	07.SDM429 GPIO		REV: V10
DOCUMENT NO.:	89626_1_12 SKU1_HA1 TA1164		Size D
DEPARTMENT:	Wingtech-SZ	DESIGNER:	DESIGNER
WINGTECH			
Date:	Monday, March 25, 2019	Sheet 7 of 82	

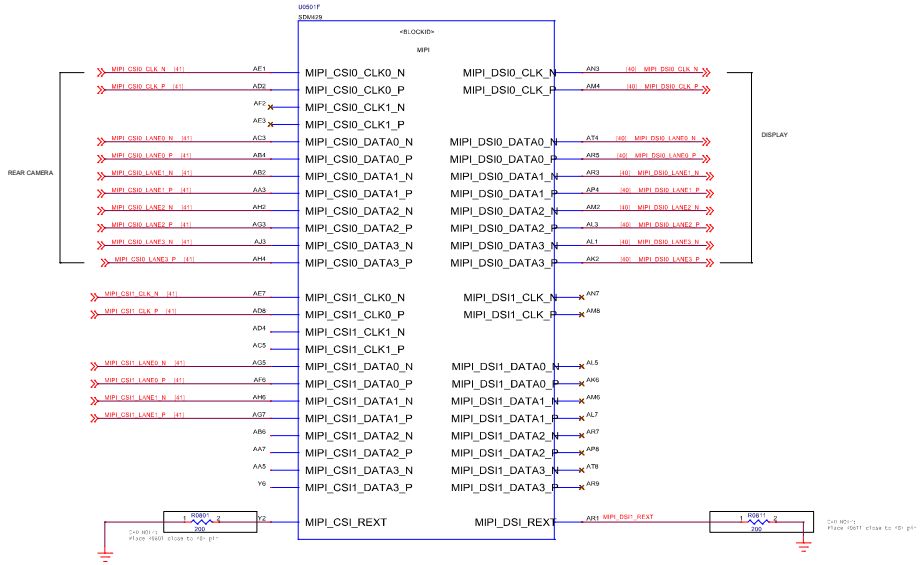

SDM429 MIPI

Title	08.SDM429 MIPI		REV: V10
DOCUMENT NO.:	89626_1_12 SKU1_HA1 TA1164		Size D
DEPARTMENT:	Wingtech-SZ	DESIGNER: DESIGNER	
Date:	Monday, March 25, 2019	Sheet 8 of 82	

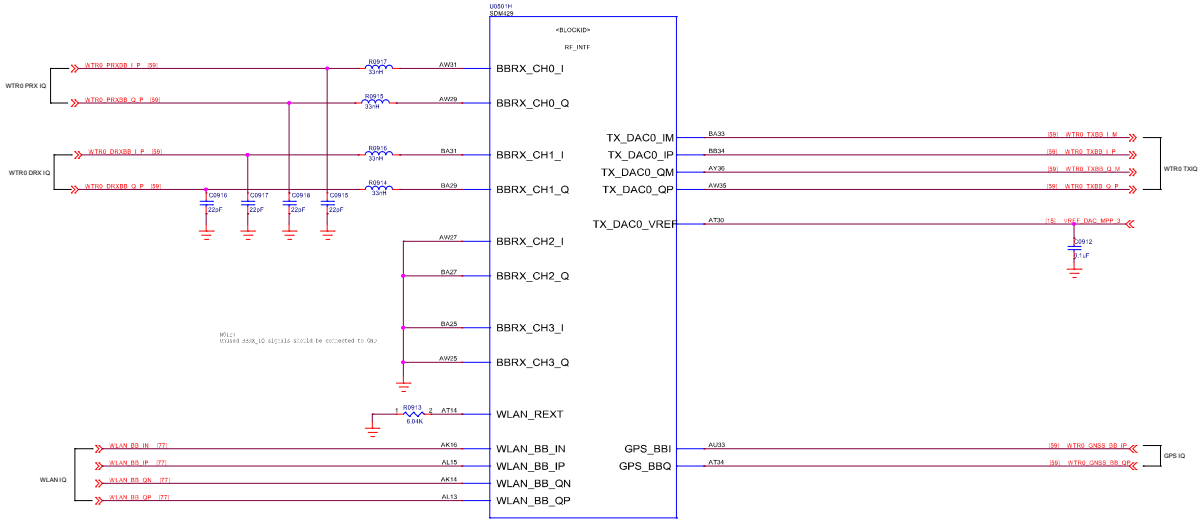

SDM429 RF

Title	09.SDM429 RF	REV: V10
DOCUMENT NO.:	89626_1_12 SKU1_HA1 TA1164	Size D
DEPARTMENT: Wingtech-SZ	DESIGNER: DESIGNER	
WINGTECH		
Date: Monday, March 25, 2019	Sheet 9 of 82	

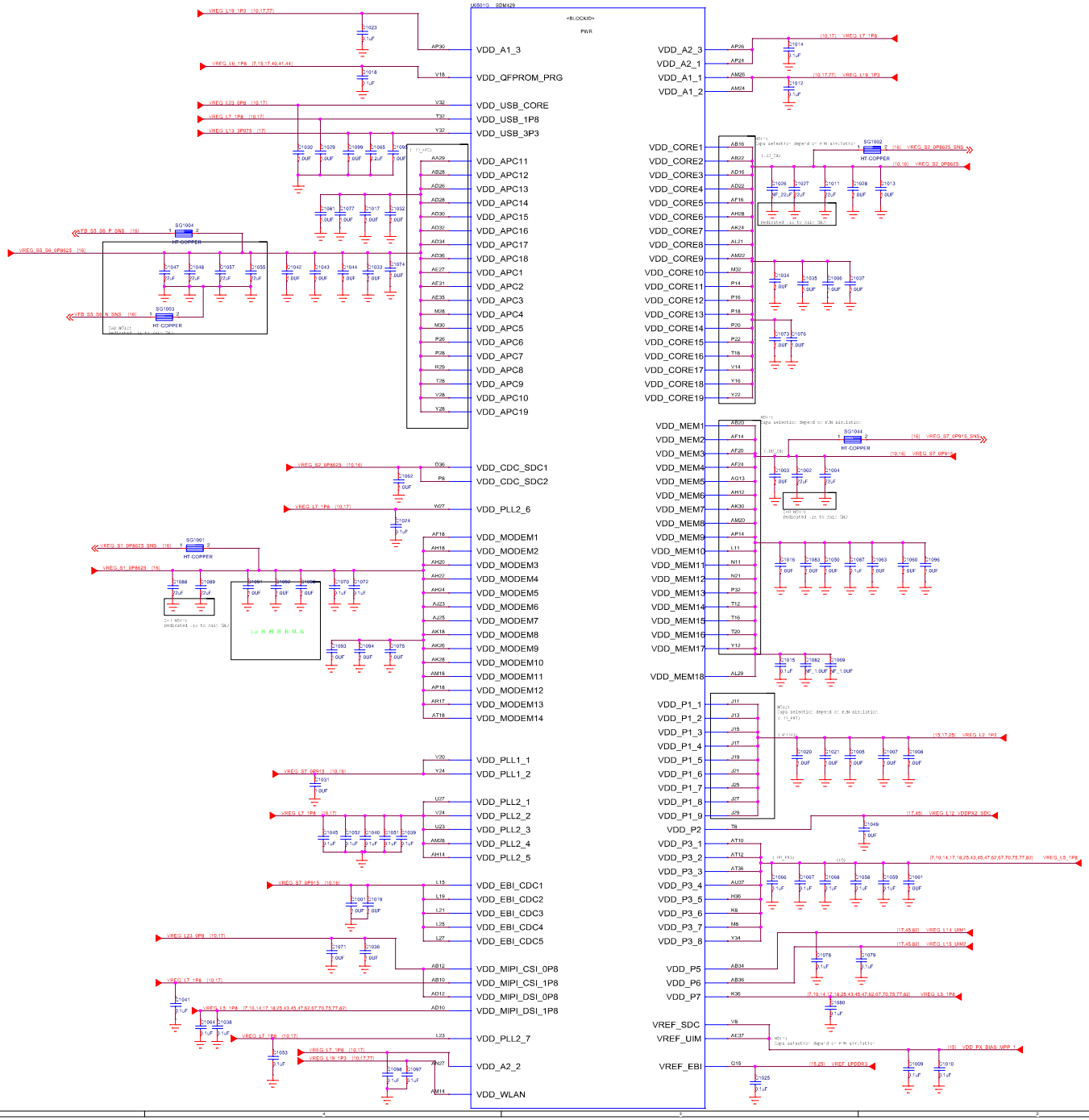

SDM429 POWER1

Title	10.SDM429 POWER1		REV: V10
DOCUMENT NO.:	89626_1_12 SKU1_HA1 TA1164		Size D
DEPARTMENT:	Wingtech-SZ	DESIGNER:	DESIGNER
Date:	Monday, March 25, 2019	Sheet	10 of 82

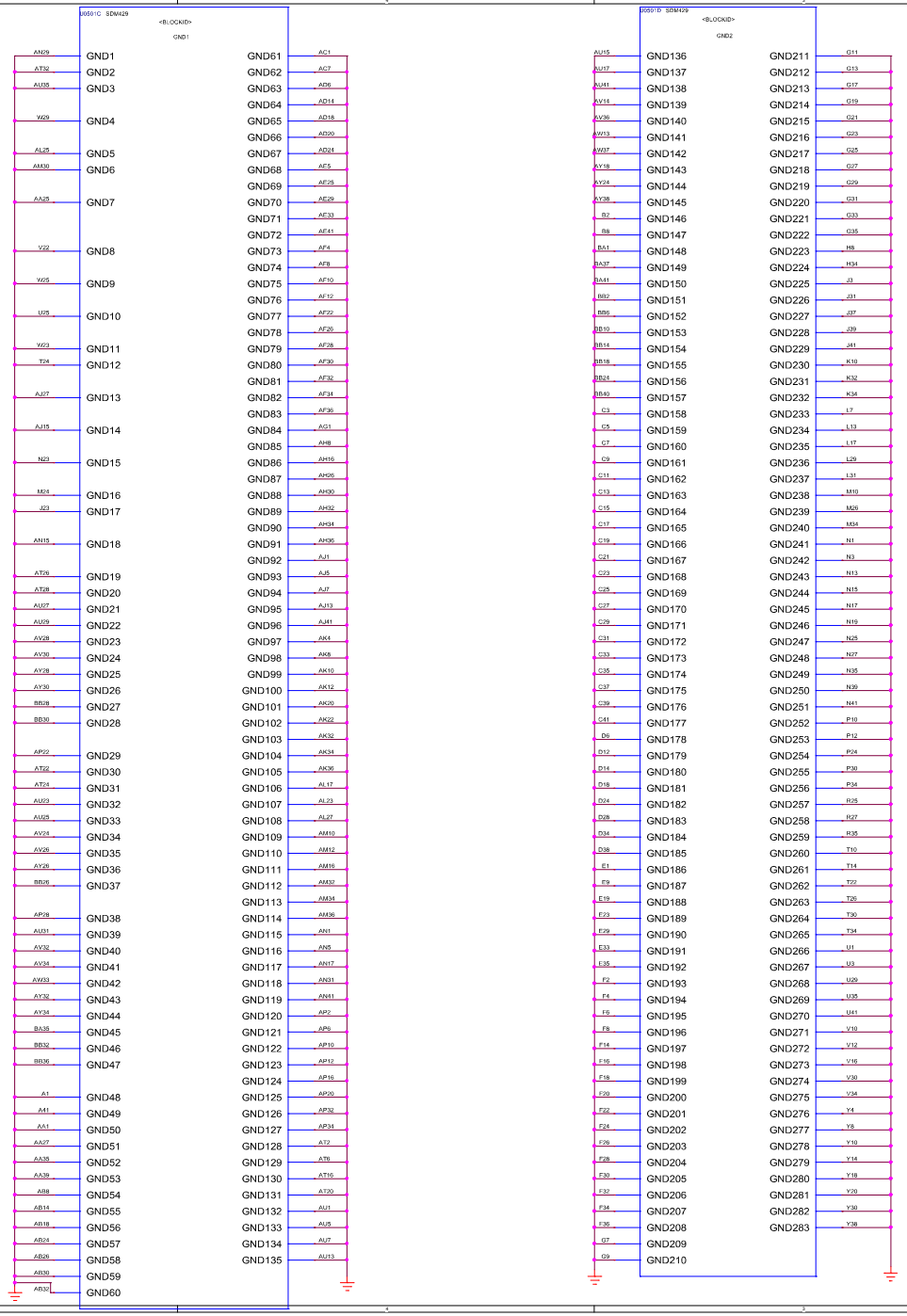

SDM429
GND

Title	12.SDM429 GND		REV: V10
DOCUMENT NO.:	89626_1_12 SKU1_HA1 TA1164		Size D
DEPARTMENT:	Wingtech-SZ	DESIGNER: DESIGNER	
WINGTECH			
Date: Monday, March 25, 2019		Sheet 12 of 82	

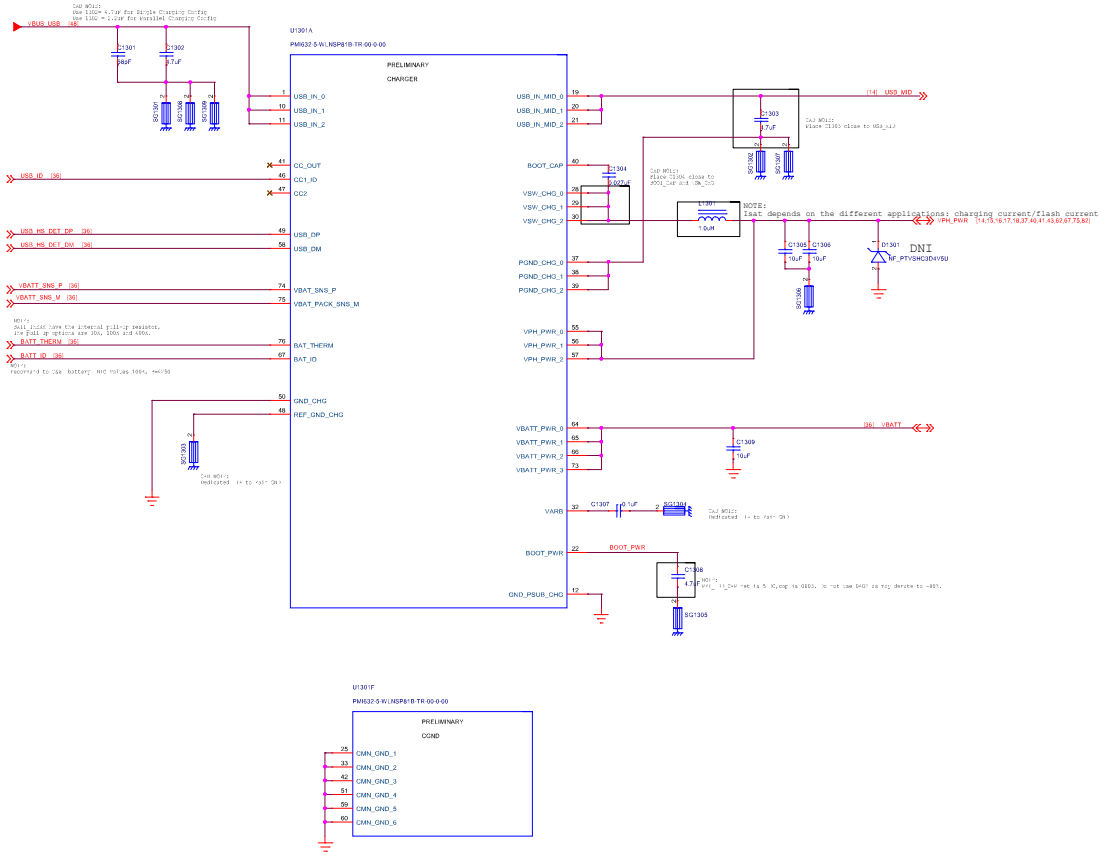

PMI632 Charger

Title	13.PMI632 Charger		REV: V10
DOCUMENT NO.:	89626_1_12 SKU1_HA1 TA1164		Size D
DEPARTMENT:	Wingtech-SZ	DESIGNER:	DESIGNER
WINGTECH			
Date:	Monday, March 25, 2019	Sheet 13 of 82	

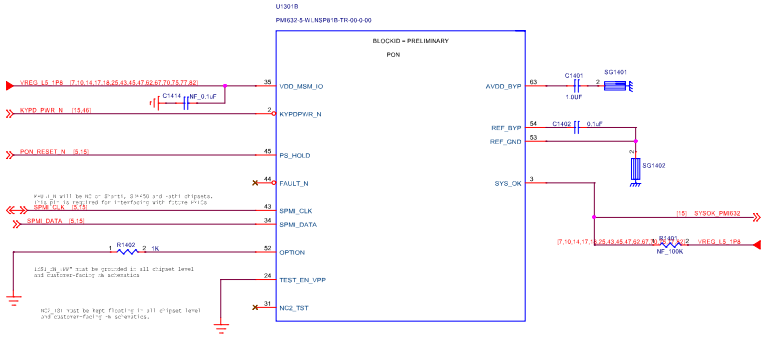

Option	HWON Configuration	PU resistance
1	SPMI, AUX4	1K
2	I2C, AUX5	22K
3	I2C, LDO4C	510K
	SPMI, LDO4C	1K

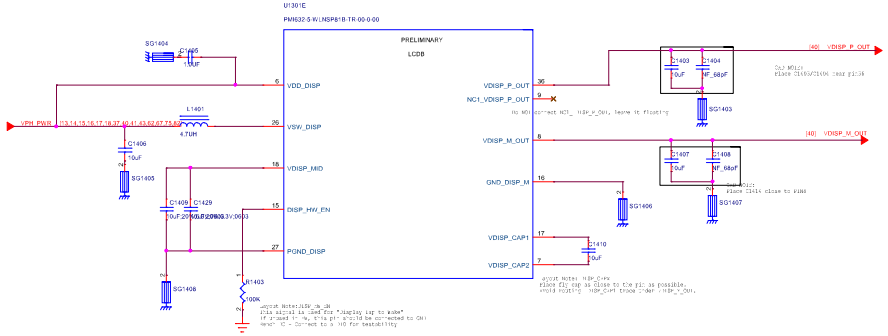

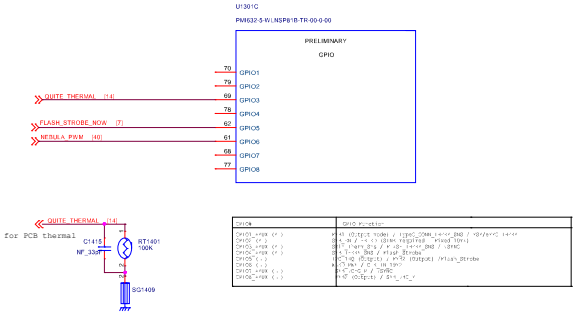

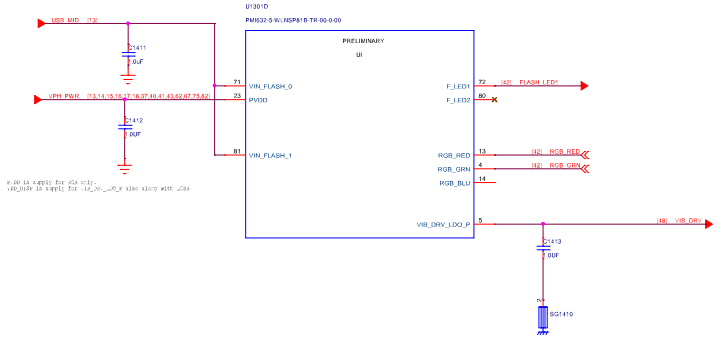

PMI632
Control/Interface

Title	14.PMI632 Control/Interface	REV:	V10
DOCUMENT NO.:	89626_1_12 SKU1_HA1 TA1164	Size	D
DEPARTMENT:	Wingtech-SZ	DESIGNER:	DESIGNER
Date:	Monday, March 25, 2019	Sheet 14 of 82	

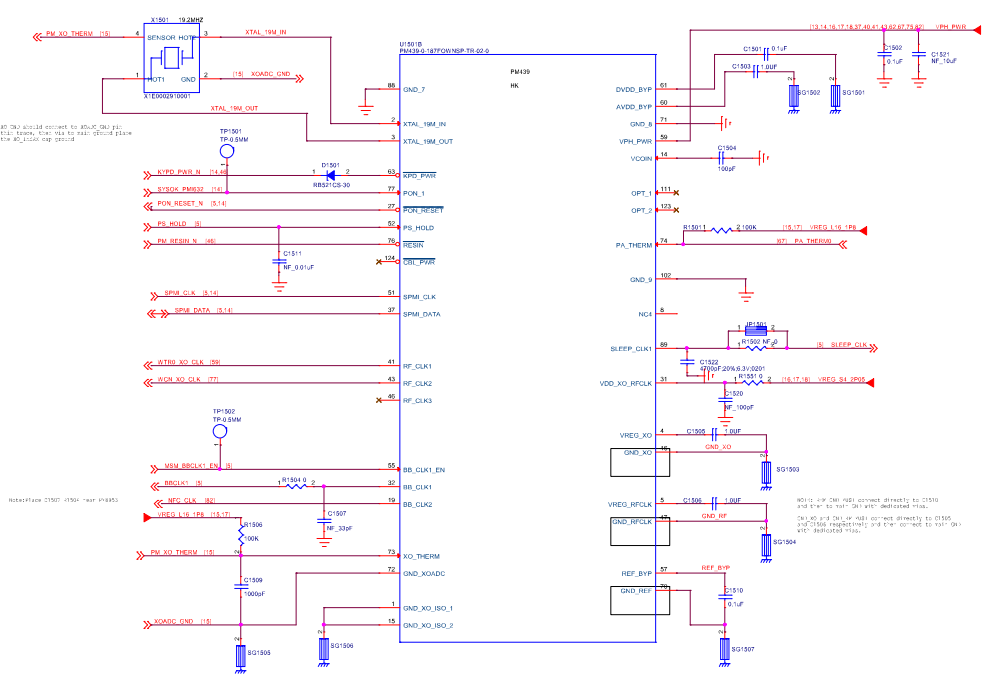

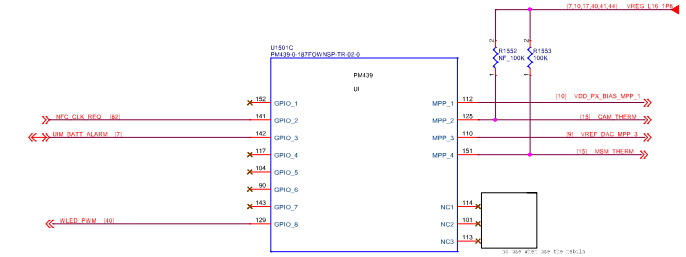

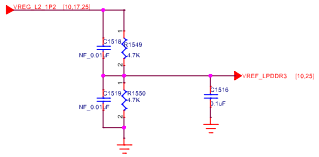

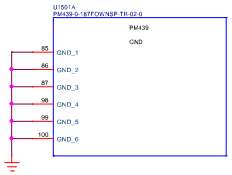

PM439
Control/Interface

Title	15.PM439 Control/Interface	REV:	V10
DOCUMENT NO.:	80626_1_12 SKU1_HA1 TA1164	Size	D
DEPARTMENT:	DEPARTMENT	DESIGNER:	DESIGNER
Date:	Monday, March 25, 2019	Sheet	15 of 82

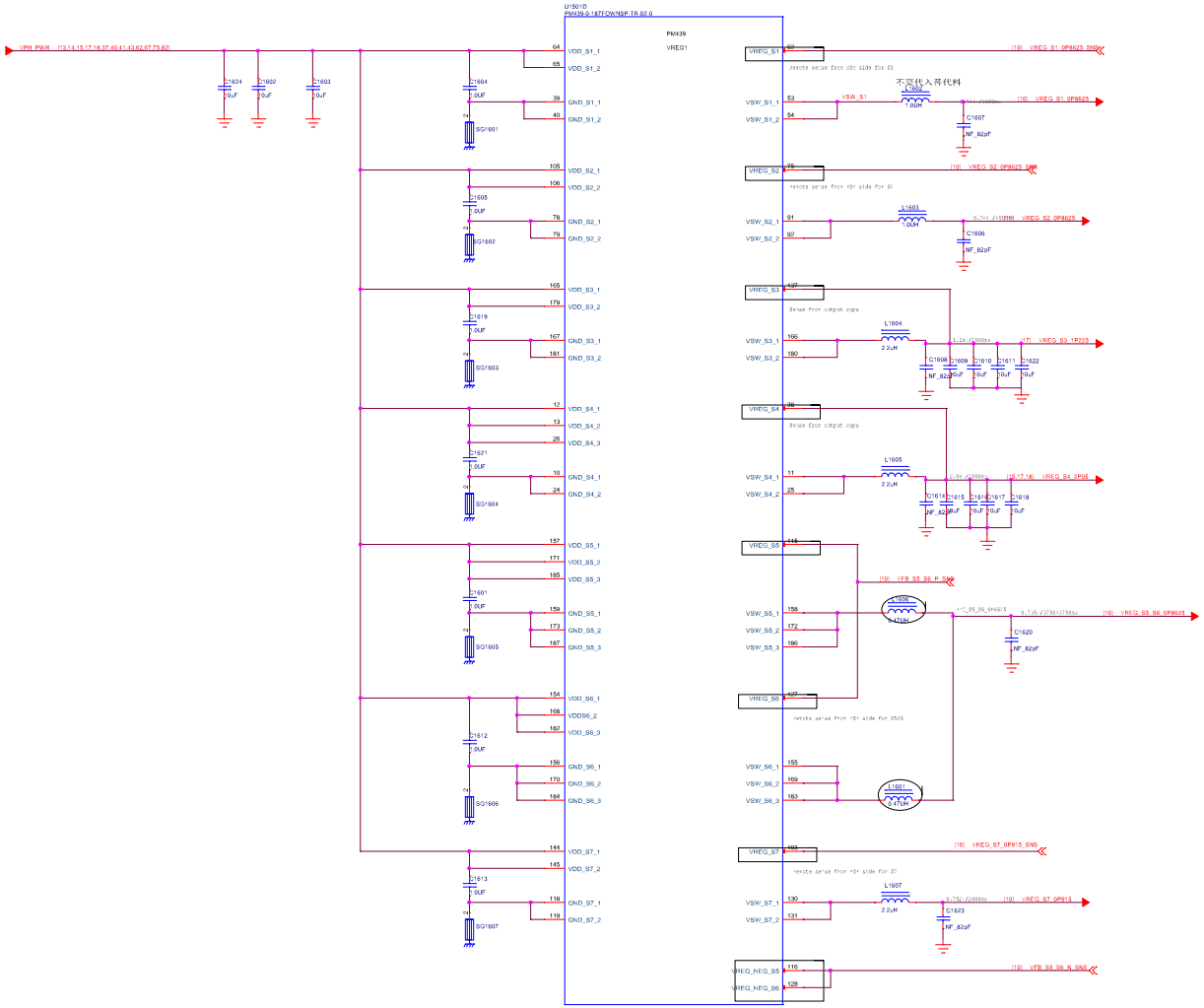

PM439 SMPS

Title	16.PM439 SMPS		REV: V10
DOCUMENT NO.:	89626_1_12 SKUI_HA1 TA1164		Size D
DEPARTMENT:	Wingtech-SZ	DESIGNER: DESIGNER	
Date: Monday, March 25, 2019		Sheet 16 of 82	

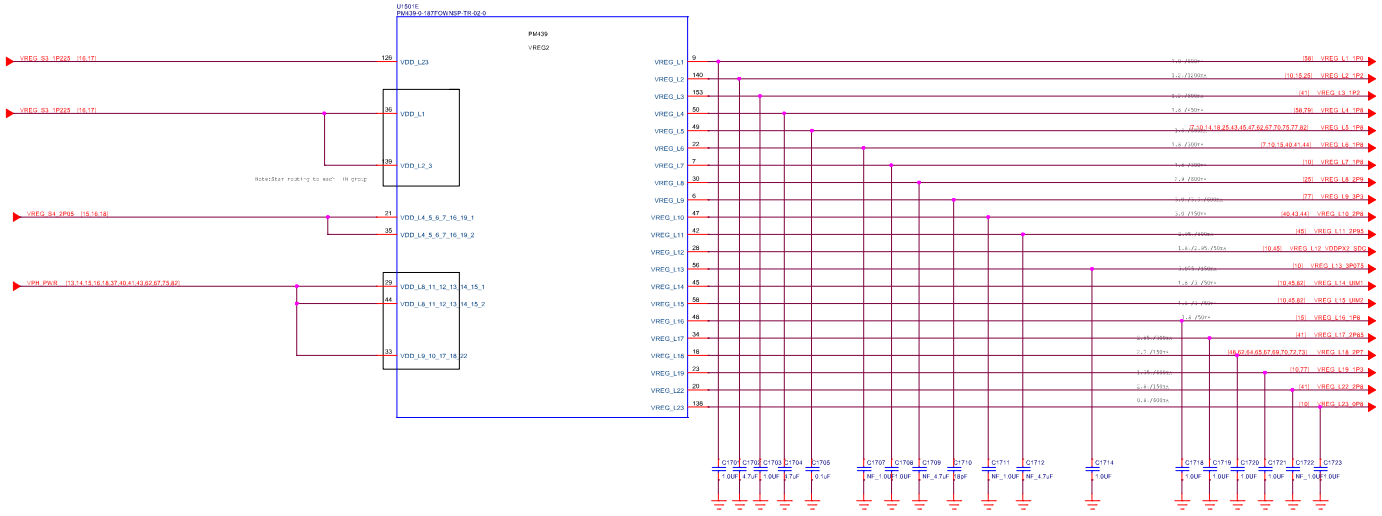

PM439
LDO

Title	17.PM439 LDO		REV: V10
DOCUMENT NO.:	80626_1_12 SKU1_HA1 TA1164		Size D
DEPARTMENT:	Wingtech-SZ	DESIGNER:	DESIGNER
WINGTECH			
Date:	Monday, March 25, 2019	Sheet 17 of 82	

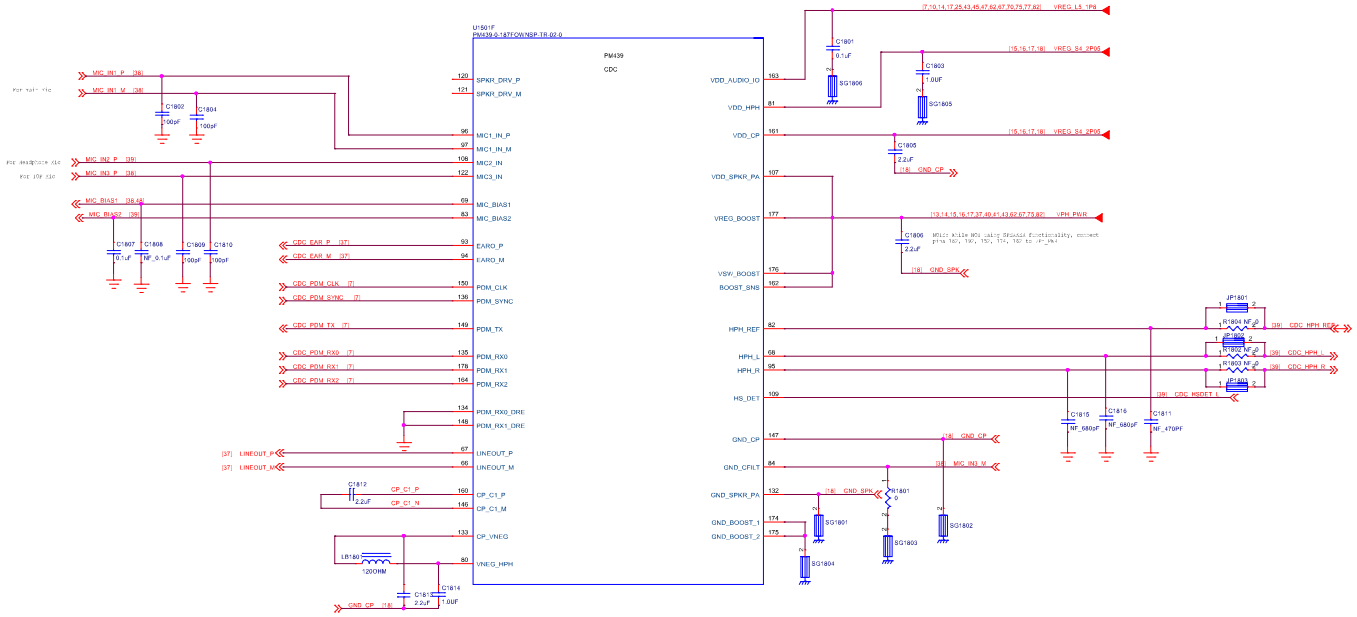

PM439 CODEC/Audio PA

Title	18.PM439 CODEC/Audio PA	REV:	V10
DOCUMENT NO.:	89626_1_12 SKU1_HA1 TA1164	Size	D
DEPARTMENT:	DEPARTMENT	DESIGNER:	DESIGNER
WINGTECH			
Date:	Monday, March 25, 2019	Sheet 19 of 82	

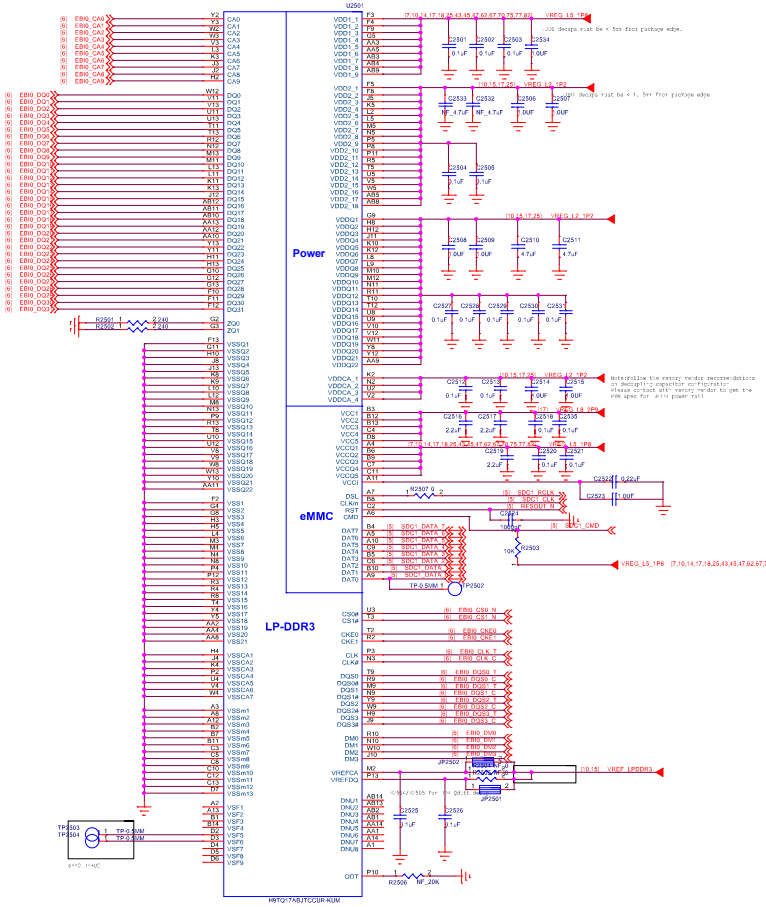

MEMORY(LPDDR3+EMMC V5.1)

Title	25.eMCP		REV: V10
DOCUMENT NO.:	89626_1_12 SKU1_HA1 TA1164		Size D
DEPARTMENT:	Wingtech-SZ	DESIGNER: DESIGNER	
WINGTECH			
Date: Monday, March 25, 2019		Sheet 25 of 82	

Battery Connector

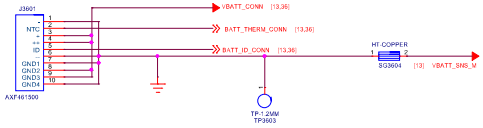

USB_IF

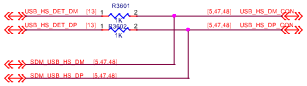

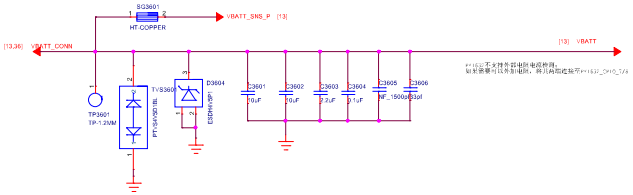

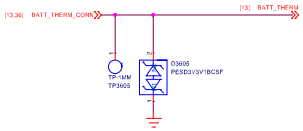

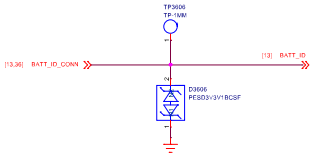

Battery/USB IF

Title	36.Battery/USB IF	REV: V10
DOCUMENT NO.:	89626_1_12 SKU1_HA1 TA1164	Size D
DEPARTMENT: Wingtech-SZ	DESIGNER: DESIGNER	
Date: Monday, March 25, 2019	Sheet 36 of 82	

AUDIO PA

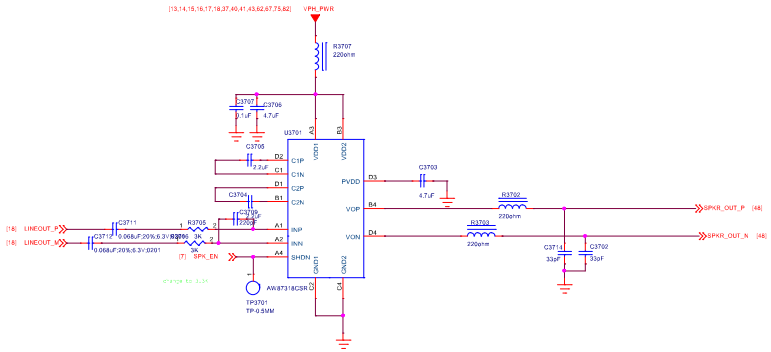

RECEIVER

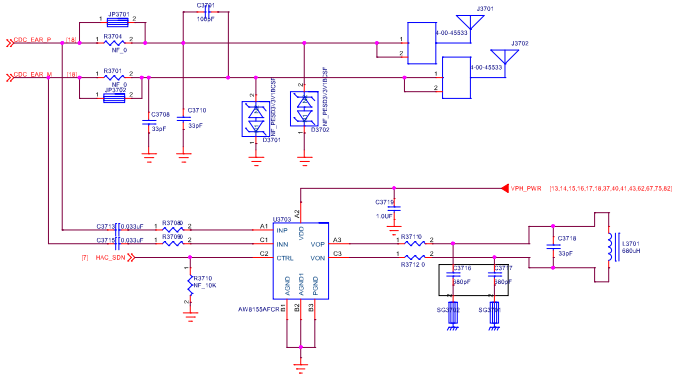

AW8155 FOR HAC

SPK/Receiver/Vibrator

Title	SPK/Receiver/Vibrator	REV: V10	
DOCUMENT NO.:	89626_1_12 SKU1_HA1 TA1164	Size D	
DEPARTMENT:	Wingtech-SZ	DESIGNER: DESIGNER	
WINGTECH			
Date: Monday, March 25, 2019		Sheet 37 of 82	

Mic2

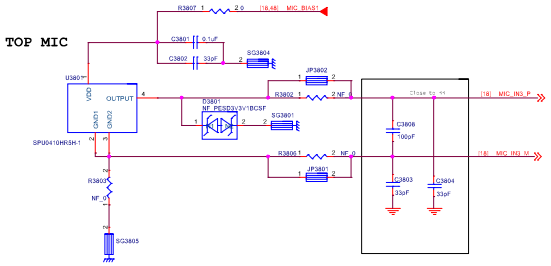

Mic1

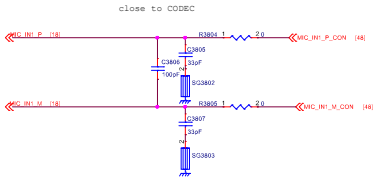

MIC

Title	3B.MIC		REV: V10
DOCUMENT NO.:	89626_1_12 SKU1_HA1 TA1164		Size D
DEPARTMENT:	Wingtech-SZ	DESIGNER:	DESIGNER
WINGTECH			
Date:	Monday, March 25, 2019	Sheet	38 of 82