PDF 文件使用 "pdfFactory Pro" 试用版本创建 www.fineprint.com.cn

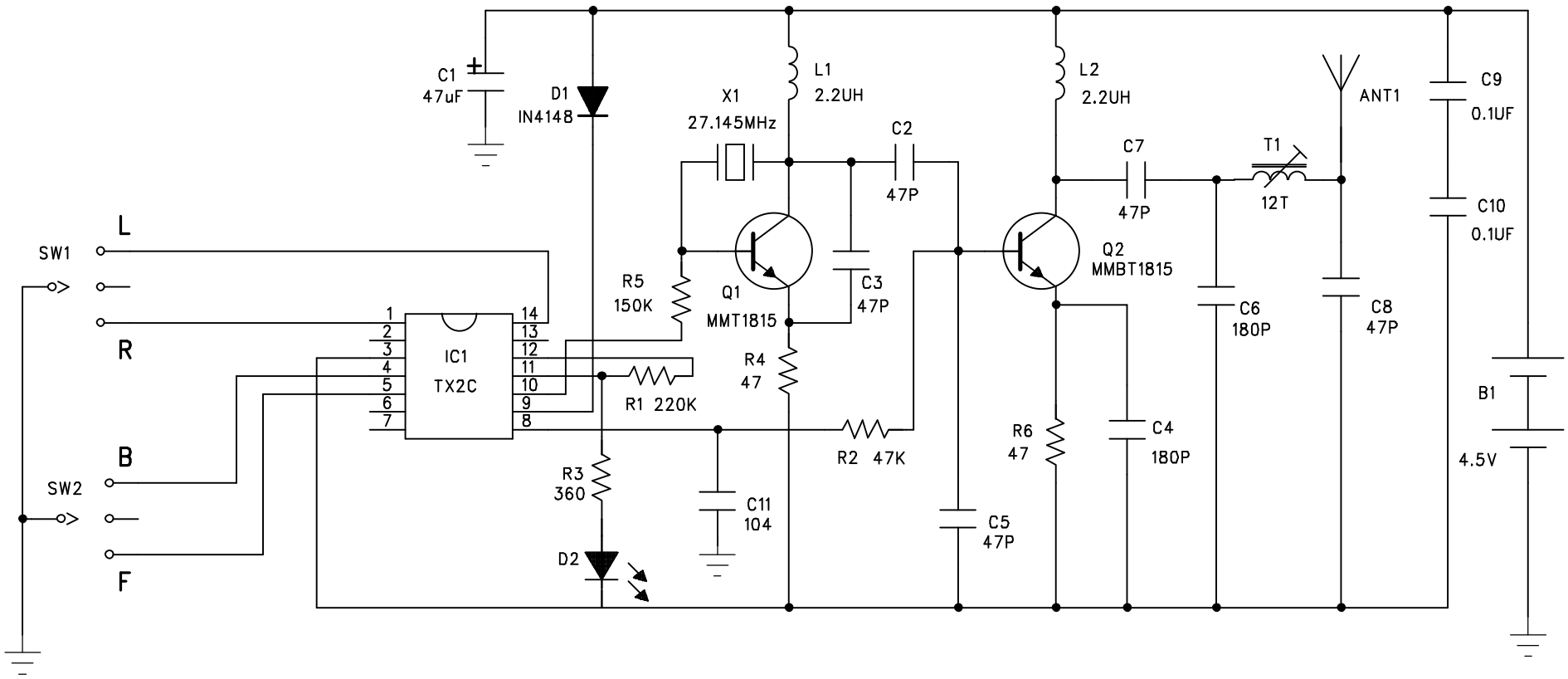

NOTE:ALL RESISTANCE VALUES ARE IN "ohm"
ALL CAPACITANCE VALUES ARE IN "UF"

* MYLAR

		ECHO TOYS LTD	
		MODEL	TX-27
		DWG NO	
DESIGNER		DATE	15 MAY 2004