SAMPLE LABEL

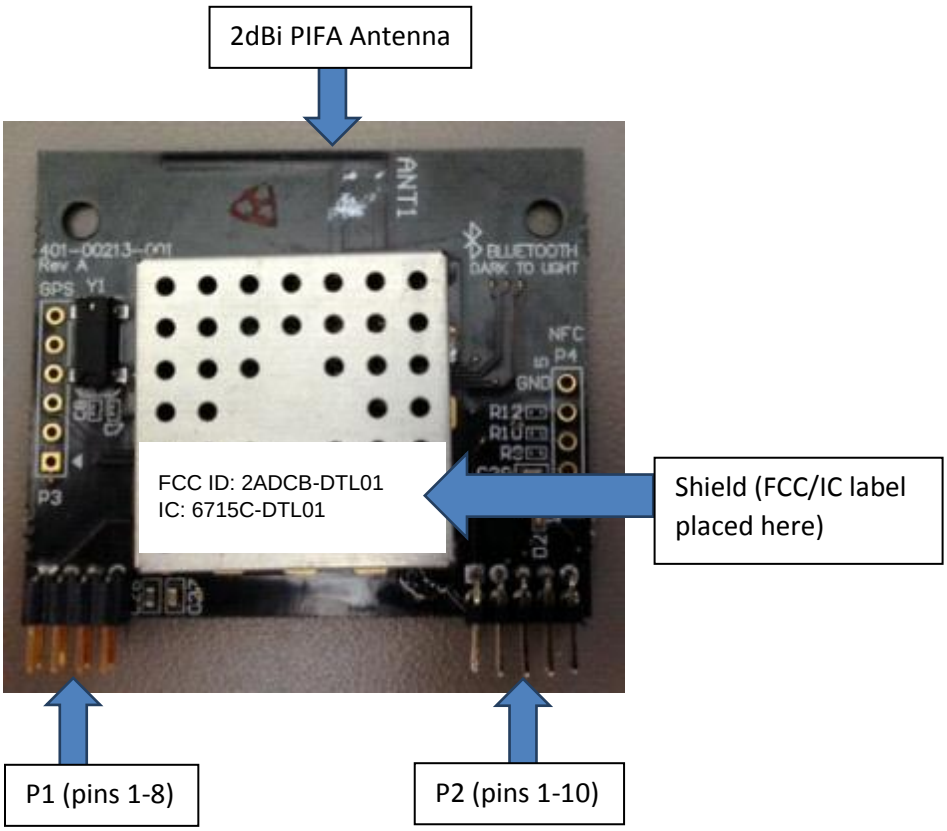

Figure 1. Label on TX module

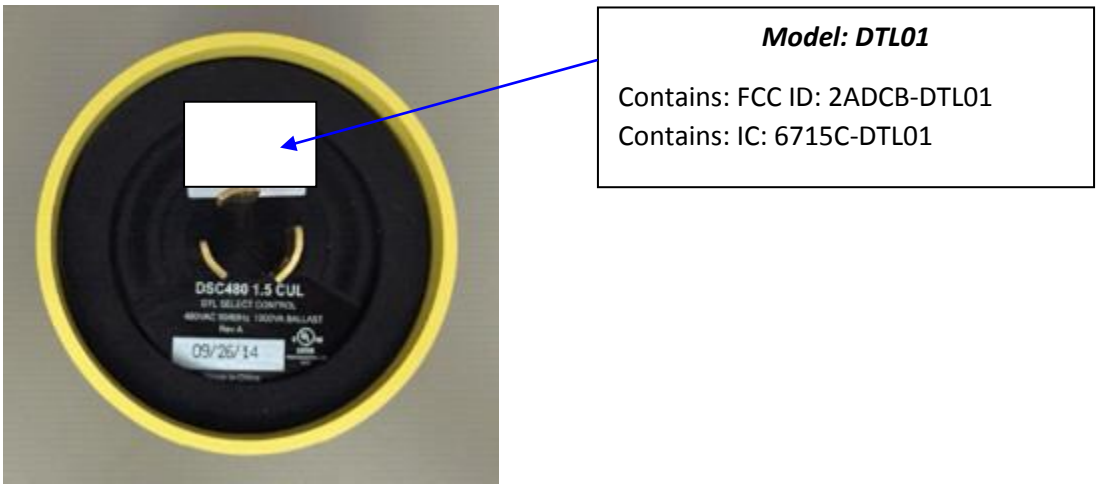

Figure 2. Label on the outside of host device