REV	DATE	DESCRIPTION	DRAWN BY
A1	13SEP02	PROTO	KDS

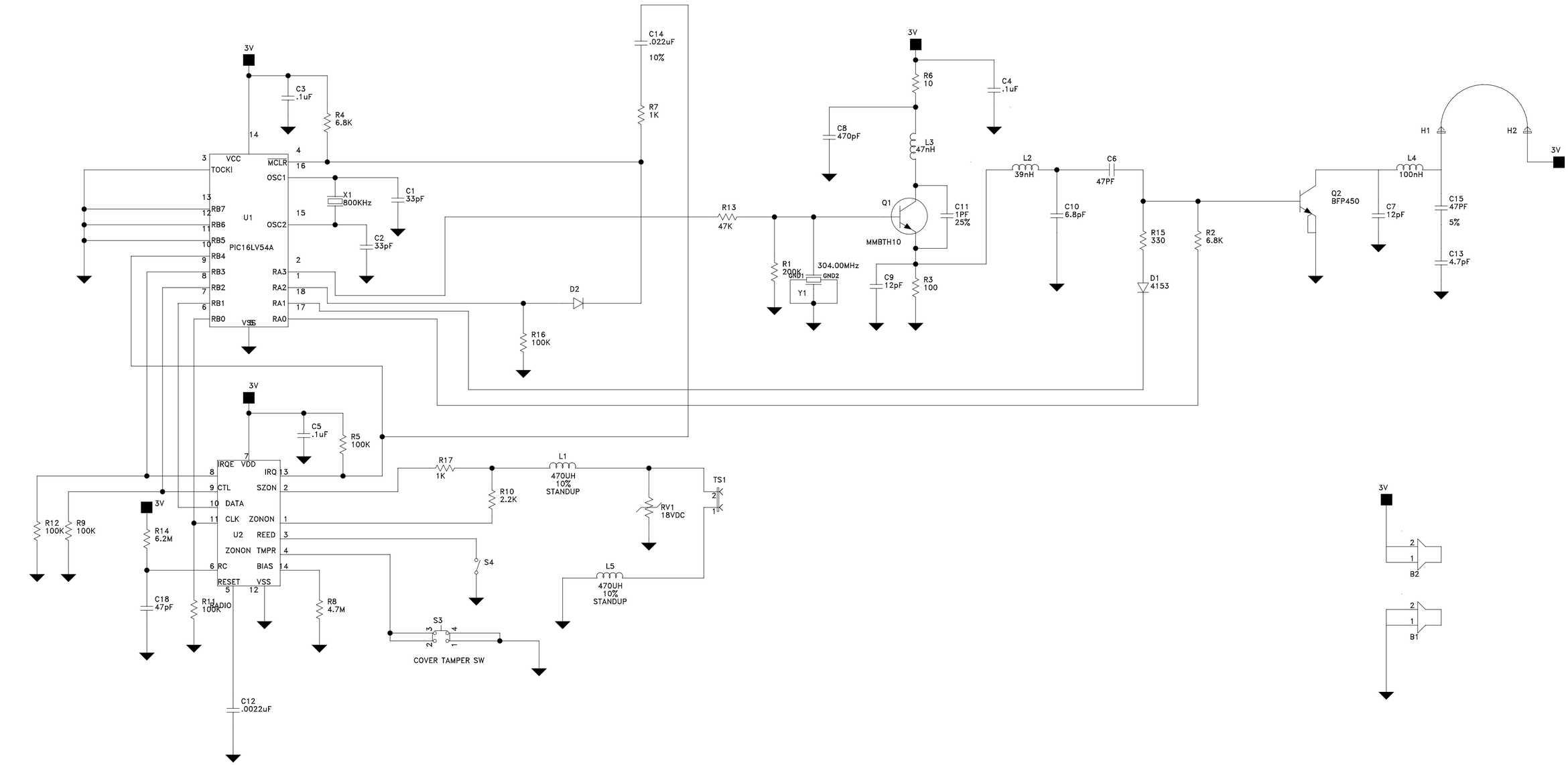

FID1 FID2 SMOBC

HM1 HM2 TOOLING HOLE

**** PROPRIETARY DATA ****
Data contained herein shall not be used, duplicated or disclosed in whole or in part outside Bosch Security Systems, without expressed written permission of same

BOSCH SECURITY SYSTEMS
130 PERINTON PARKWAY
FAIRPORT, NEW YORK 14450-9199 U.S.A.
TEL: (585) 223-4060
FAX: (585) 223-9180

BOSCH

	Initial/Date
Design Approval	
Design Review Date	
Manuf. Reviewed	
Test Reviewed	
Release Approval	
Release Date	

Title: SE3403 SCHEMATIC

Drawn By: KDS
Created 13SEP02
SHEET 1 OF 1

PART NUMBER 4998122485 REV. A1