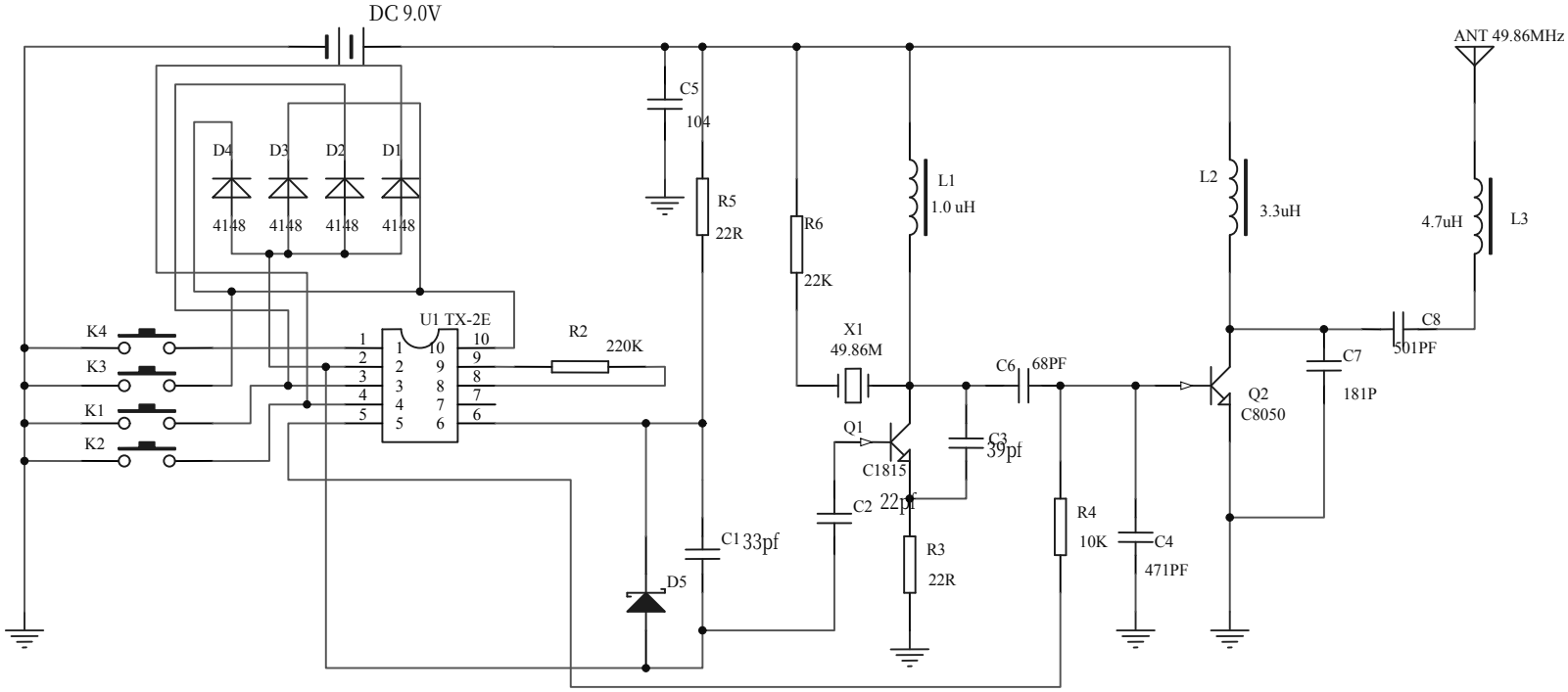Transmitter Circuit Diagram