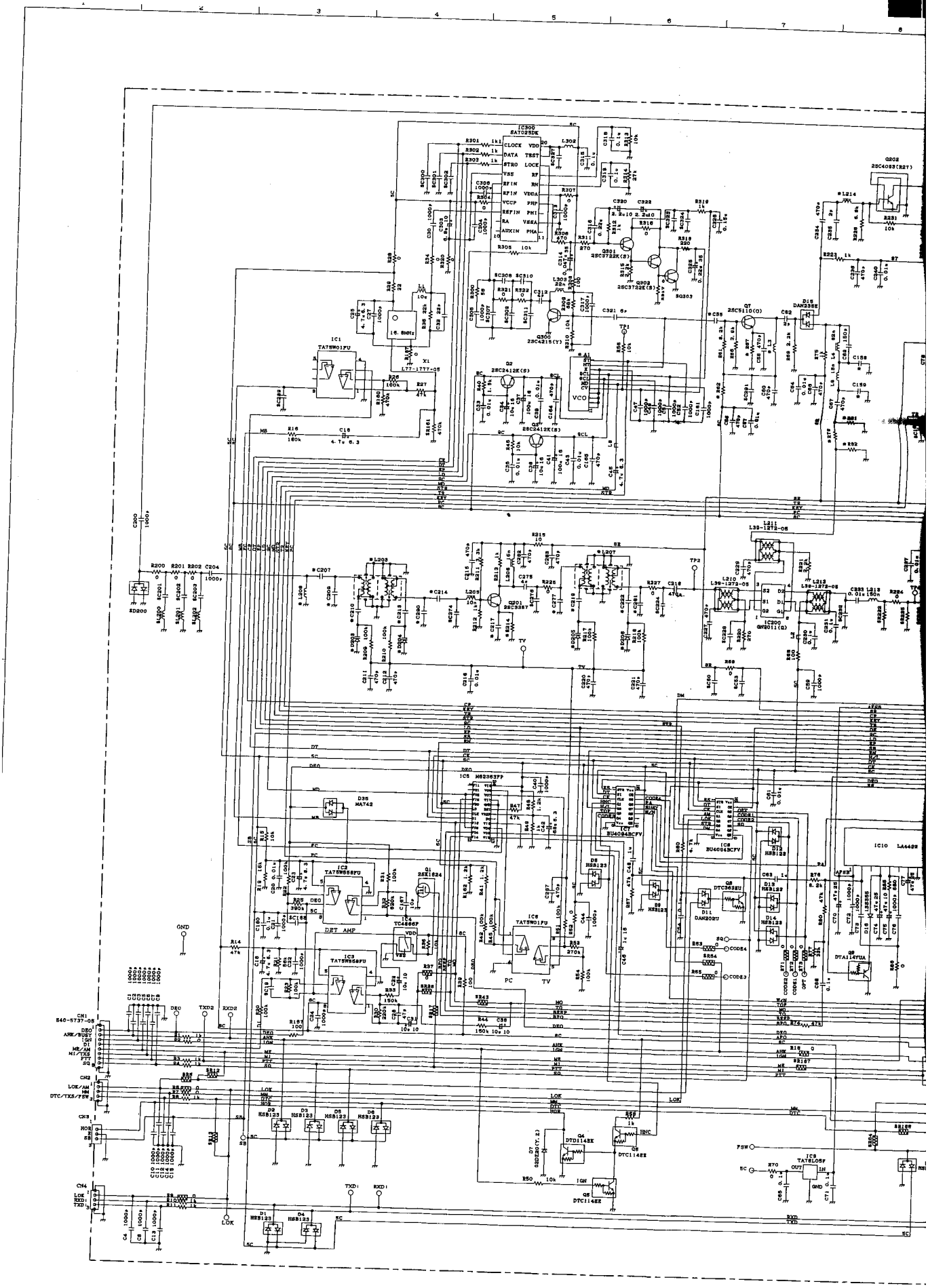
IC300 SAT025DK
CLOCK
DATA
STRO
VSS
RFIN
RFIN
VCCP
REFIN
RA
AUXIN
VDD
TEST
LOCK
RF
RN
VDDA
PHP
PHI
VSSA
PHA
IC1 TA75W01FU
16.8MHz
X1
177-1777-05
VCO
Q2 2SC2412K(S)
Q3 2SC2412K(S)
Q4 2SC2412K(S)
Q301 2SC3722K(S)
Q302 2SC3722K(S)
Q303 2SC4215(Y)
Q7 2SC5110(O)
Q202 2SC4093(R27)
D15 DAN238E
IC200 GN3011(G)
L39-1272-05
IC5 M52363FP
IC2 TA75W558FU
IC3 TA75W558FU
IC4 TC4066F
IC6 TA75W01FU
IC7 BU4094BCFV
IC8 BU4094BCFV
IC9 DTA114YUA
IC10 LA4422
IC8 TA78L05F
DRT AMP
PC
TV
GND
CN1 540-5737-05
CN2
CN3
CN4
D35 MA742
D1 HSB123
D2 HSB123
D3 HSB123
D4 HSB123
D5 HSB123
D6 HSB123
D7 UDZS2C(7.2)
Q4 DTD114EK
Q5 DTC114ES
Q6 DTC114ES
Q8 DTC363EU
D11 DAN202U
D12 HSB123
D13 HSB123
D14 HSB123
D8 HSB123
D9 HSB123
Q1 2SK1824
TXD2
RXD2
TXD1
RXD1
LOK
FSW
SC
DEO
DTT
CODE1
CODE2
CODE3
CODE4
AFSR
AFSX
PJ
RXD
TXD

USE FOR	SYMBOL	REVISION NO	CODE	ISSUED	DATE
X57-5730-10	⚠ X				19 - -
X57-5730-11	⚠ X				19 - -
X57-5730-12	⚠ X				19 - -
	⚠ X				19 - -
	⚠ X				19 - -
	⚠ X				19 - -
	⚠ X				19 - -
	⚠ X				19 - -
	⚠ X				19 - -

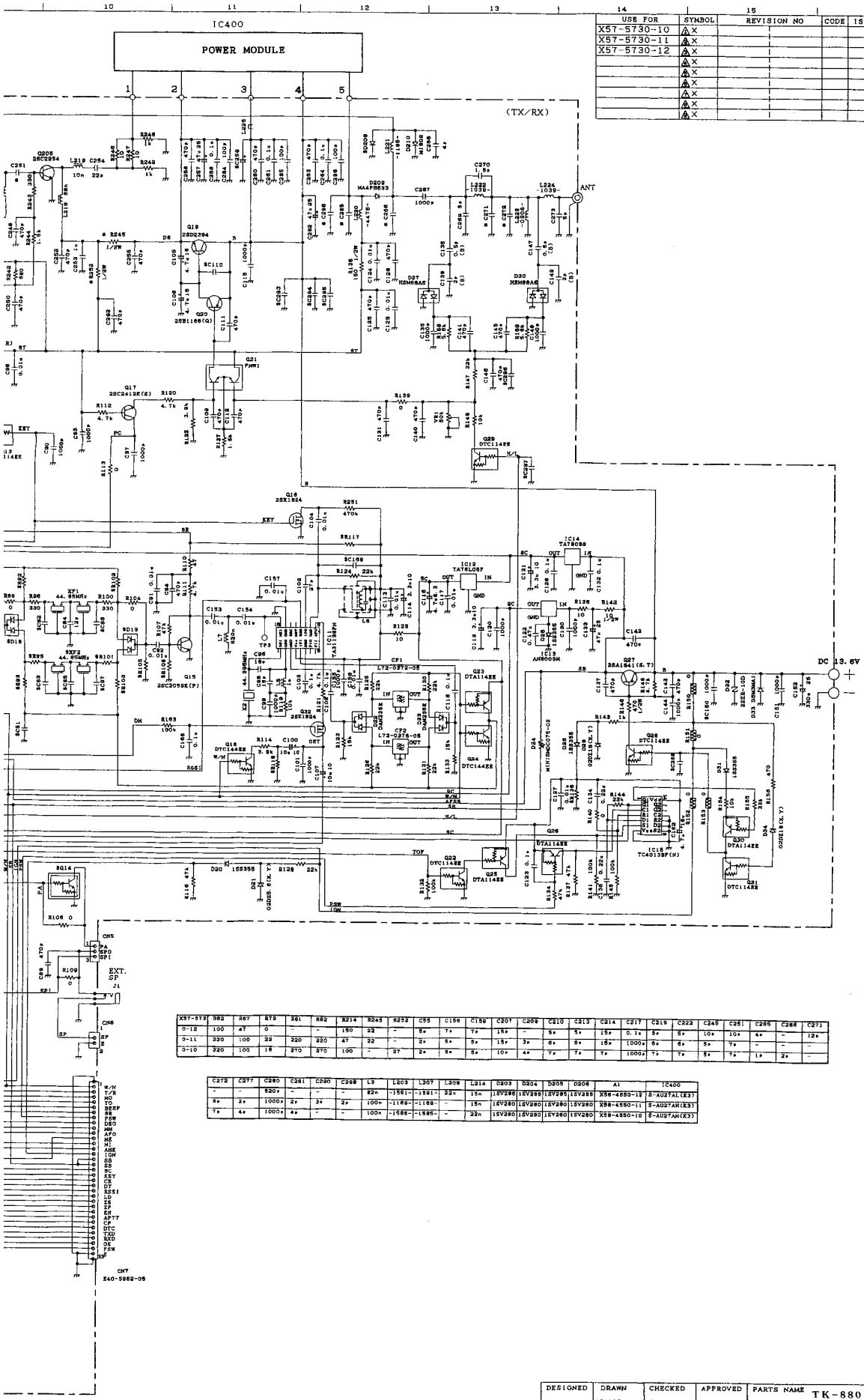

X57-573	R62	R67	R75	R81	R82	R214	R245	R252	C55	C156	C159	C207	C209	C210	C213	C214	C217	C219	C222	C248	C251	C265	C266	C271
0-12	100	47	0	-	-	150	22	-	5p	7p	7p	15p	-	5p	5p	15p	0.1u	5p	5p	10p	10p	4p	-	12p
0-11	220	100	22	220	220	47	22	-	2p	5p	5p	15p	3p	6p	6p	15p	1000p	6p	6p	5p	7p	-	-	-
0-10	220	100	18	270	270	100	-	27	2p	5p	5p	10p	4p	7p	7p	7p	1000p	7p	7p	5p	7p	1p	2p	-

C272	C277	C280	C281	C290	C299	L3	L203	L207	L209	L214	D203	D204	D205	D206	A1	IC400
-	-	820p	-	-	-	82n	-1591-	-1591-	22n	15n	18V280	18V280	18V295	18V285	X58-4550-12	S-AU27AL(K3)
5p	2p	1000p	2p	3p	2p	100n	-1169-	-1169-	-	15n	18V280	18V280	18V280	18V280	X58-4550-11	S-AU27AH(K3)
7p	4p	1000p	4p	-	-	100n	-1585-	-1585-	-	22n	18V280	18V280	18V280	18V280	X58-4550-10	S-AU27AH(K3)

DESIGNED	DRAWN	CHECKED	APPROVED	PARTS NAME
	12/OCT/1998 T. HORIUCHI	12/OCT/1998 T. OONUKI	13/OCT/1998 K. MOROHASHI	TK-880 TX RX SECTION
株式会社ケンウッド	KENWOOD CORPORATION			PARTS NUMBER Z92-0685-01 1/1 01

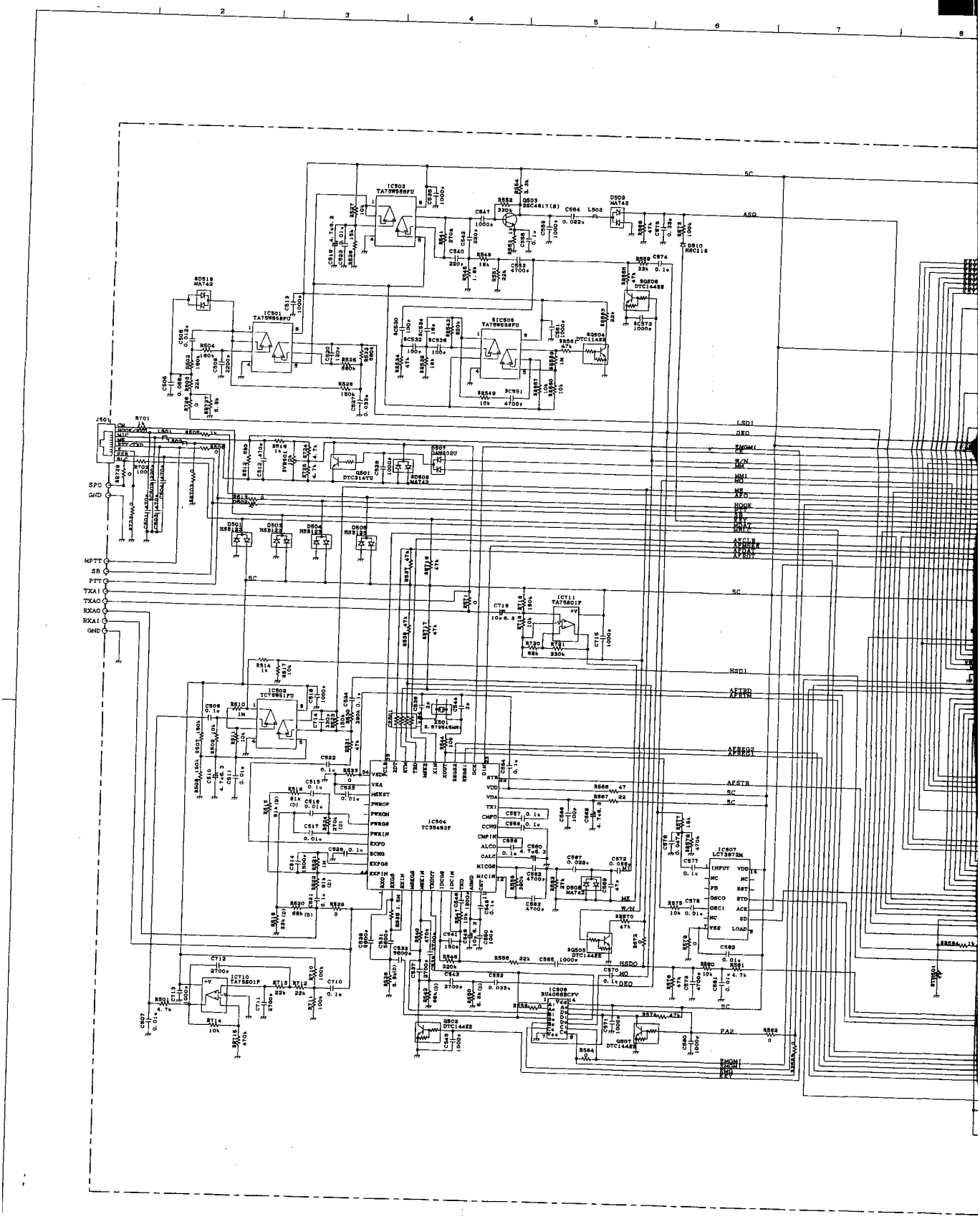

node: scad9 directory: /users/sch/work/c5231
time: 15:59 04-nov-98 comment: c884907 page: TA2459002

USE FOR	SYMBOL	REVISION NO	CODE	ISSUED	DATE
X57-5730-10	⚠X				19 - -
X57-5730-11	⚠X				19 - -
X57-5730-12	⚠X				19 - -
	⚠X				19 - -
	⚠X				19 - -
	⚠X				19 - -
	⚠X				19 - -
	⚠X				19 - -
	⚠X				19 - -
	⚠X				19 - -

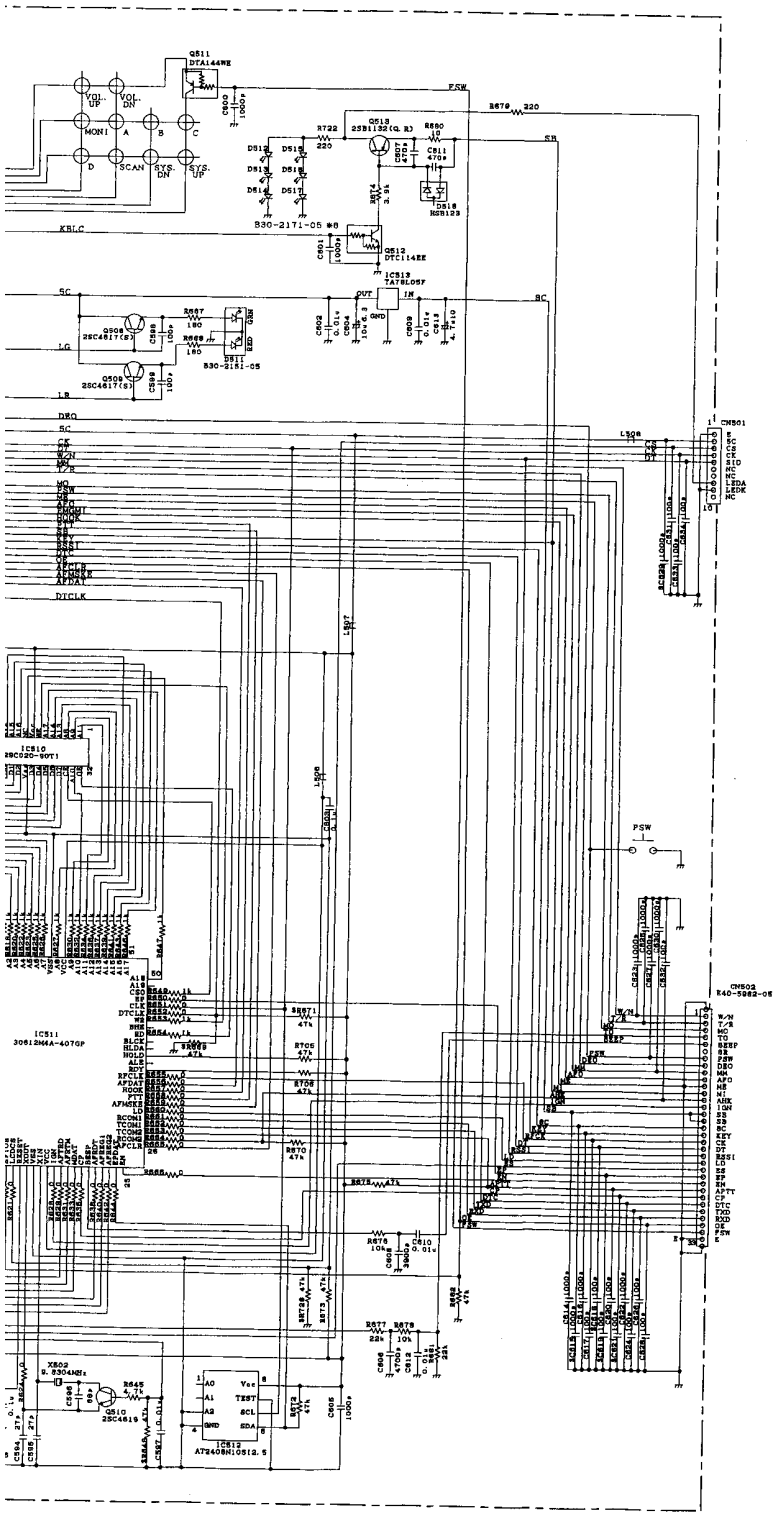

DESIGNED	DRAWN	CHECKED	APPROVED	PARTS NAME
	30/OCT/1998	30/OCT/1998	30/OCT/1998	TK-880
	T. KOBAYASHI	M. OGASAWARA	K. MOROHASHI	CONTROL SECTION
株式会社ケンウッド KENWOOD CORPORATION				PARTS NUMBER Z92-0686-01 1/1 02 S

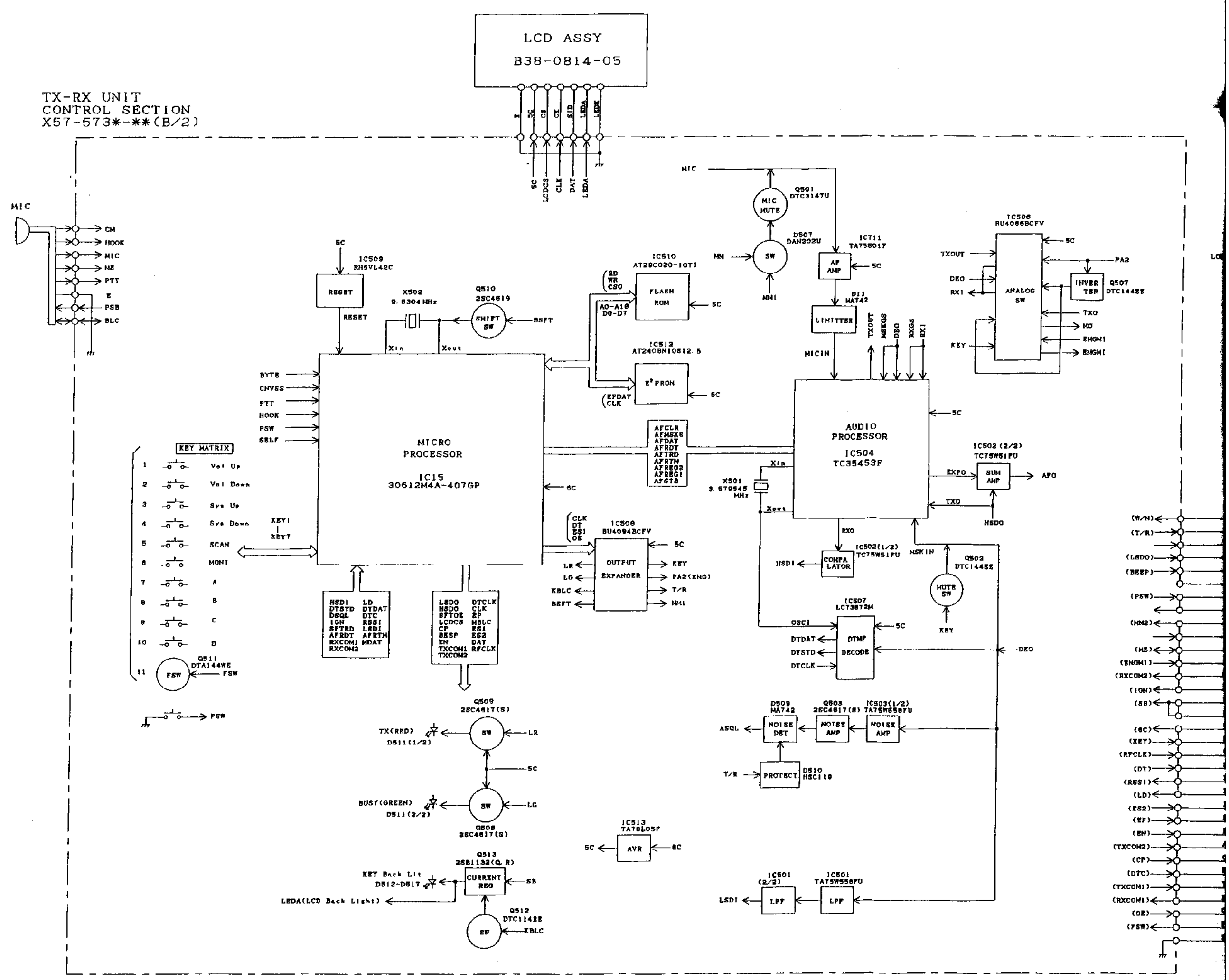
LCD ASSY
B38-0814-05
TX-RX UNIT
CONTROL SECTION
X57-573*-**(B/2)
MICRO PROCESSOR
IC15
30612M4A-407GP
AUDIO PROCESSOR
IC504
TC35453F
KEY MATRIX
FLASH ROM
E² PROM
RESET
OUTPUT EXPANDER
ANALOG SW
DTMF DECODE
NOISE DET
NOISE AMP
PROTECT
LPF
AVR
CURRENT REG
LIMITTER
AF AMP
SUM AMP
COMPA LATOR
MIC MUTE
MUTE SW
SHIFT SW
INVER TER
MIC

USE FOR	SYMBOL	REVISION NO	CODE	ISSUED	DATE
	⚠X				19 - -
	⚠X				19 - -
	⚠X				19 - -
	⚠X				19 - -
	⚠X				19 - -
	⚠X				19 - -
	⚠X				19 - -
	⚠X				19 - -
	⚠X				19 - -

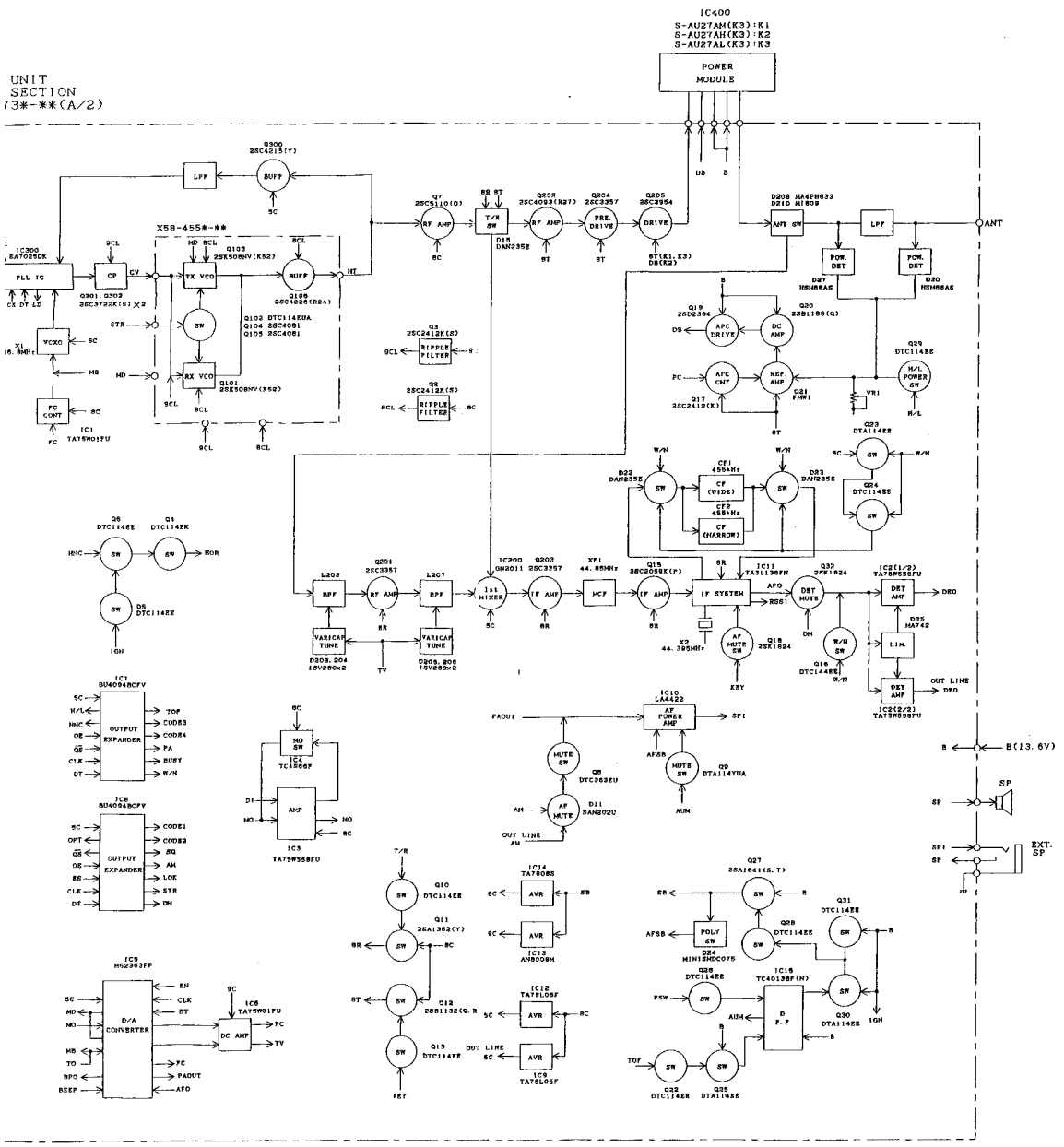

DESIGNED	DRAWN	CHECKED	APPROVED	PARTS NAME
				BLOCK DIAGRAM
				PARTS NUMBER
				TK-880 K1/K2/K3

USE FOR	SYMBOL	REVISION NO	CODE	ISSUED	DATE
X58-455*-**	1 ×				19 - -
	2 ×				19 - -
	3 ×				19 - -
	4 ×				19 - -
	5 ×				19 - -

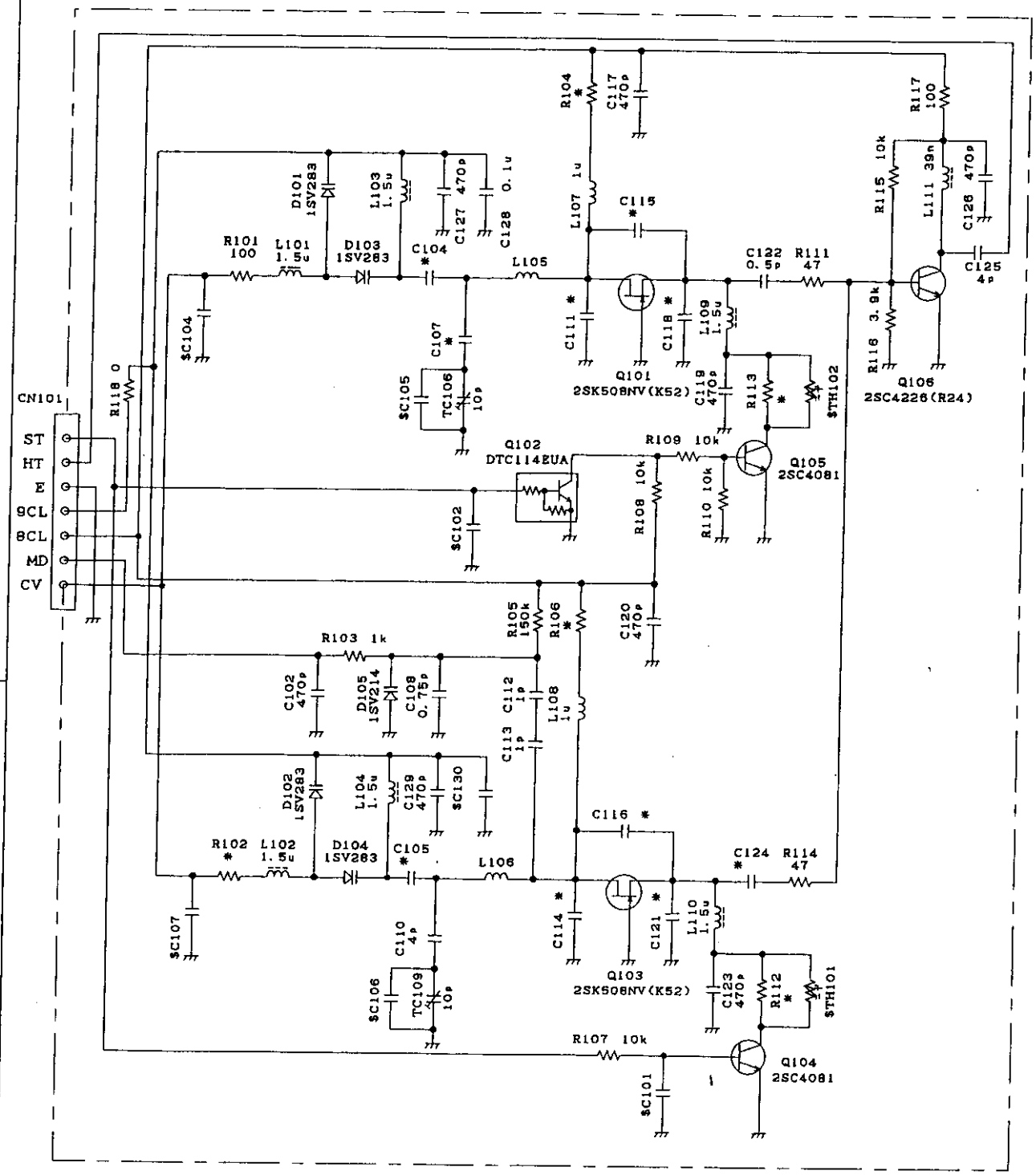

	R102	R104	R106	R112	R113	C104	C105	C107	C111	C114	C115	C116	C118	C121	C124
0-10	0	27	27	150	180	10p	7p	10p	4p	4p	4p	6p	9p	7p	0.5p
0-11	100	150	39	150	150	10p	7p	4p	4p	2.5p	2p	4p	2p	8p	0.75p
0-12	100	100	10	180	180	13p	13p	10p	5p	4p	10p	10p	7p	5p	0.75p

DESIGNED	DRAWN	CHECKED	APPROVED	PARTS NAME
26/JAN/1996	21/OCT/1998	21/OCT/1998	21/OCT/1998	ユニット配線図 TK-880
A. NAKAMURA	K. NOMURA	N. OGASAWARA	K. MOROHASHI	SCHEMATIC DIAGRAM
				PARTS NUMBER

BOL	REVISION NO	CODE	ISSUED	DATE
				19 - -
				19 - -
				19 - -
				19 - -
				19 - -

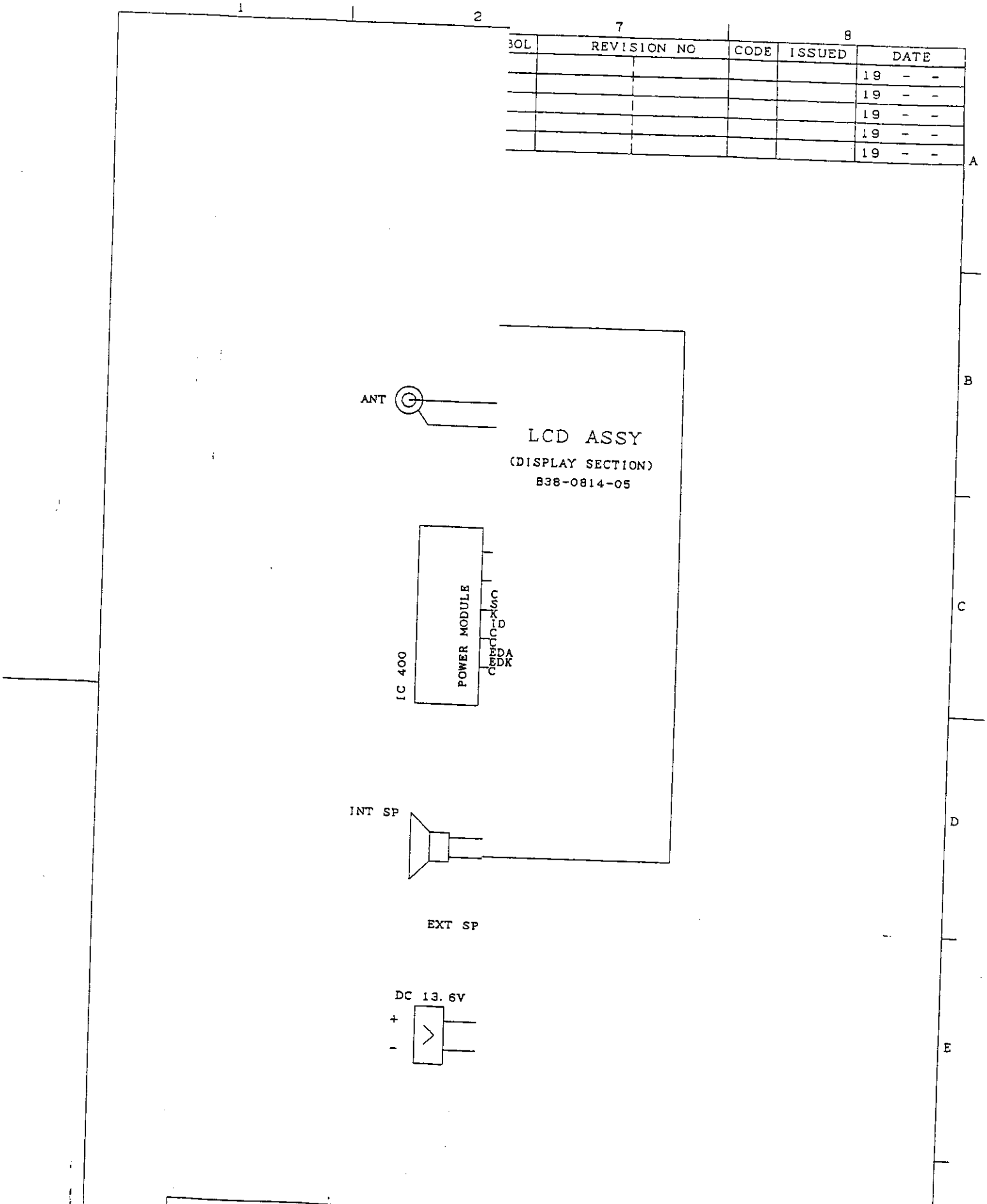

	TX RX UNIT
Y51-4560-10	X57-5730-10
Y51-4560-11	X57-5730-11
Y51-4560-12	X57-5730-12

APPROVED

PARTS NAME 総配線図 TK-880 INTERCONNECT DIAGRAM

PARTS NUMBER

	⚠ X					19	- -
	⚠ X					19	- -
	⚠ X					19	- -
	⚠ X					19	- -

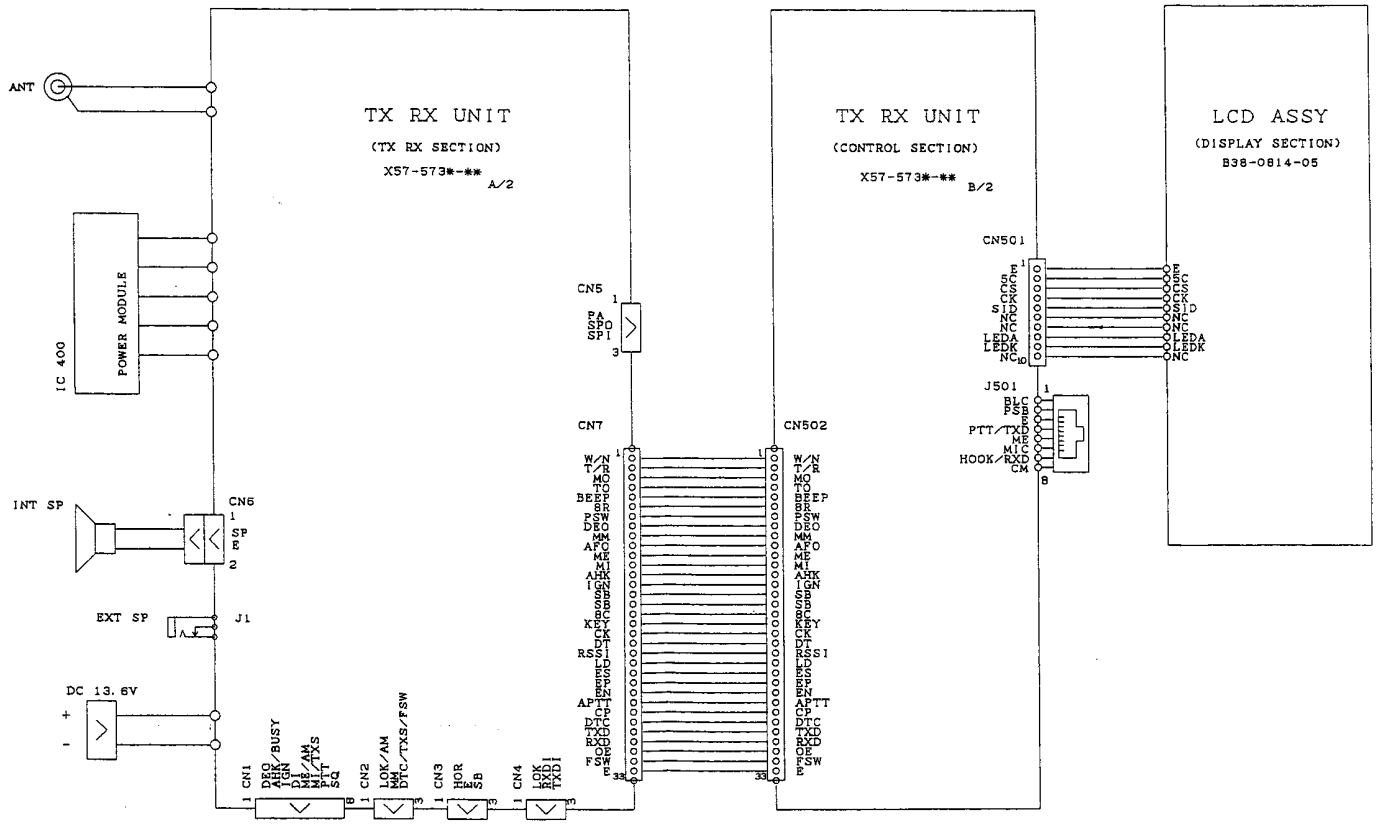

	TX RX UNIT	IC400
Y51-4560-10	X57-5730-10	S-AU27AM(K3)
Y51-4560-11	X57-5730-11	S-AU27AH(K3)
Y51-4560-12	X57-5730-12	S-AU27AL(K3)

DESIGNED	DRAWN	CHECKED	APPROVED	PARTS NAME
22/OCT./1998 T.Horiuchi	22/OCT/1998 T.Horiuchi			総配線図 TK-880 INTERCONNECT DIAGRAM
株式会社ケンウッド KENWOOD CORPORATION				PARTS NUMBER Z83-3067-03

S

node: scad9 directory: /users/sch/work/c5231 page: Y51456G000
time: 17:08 04-nov-98