SAR Dipole

Performance Measurement Report

ISSUED BY
Shenzhen BALUN Technology Co., Ltd.

FOR

Validation Dipoles

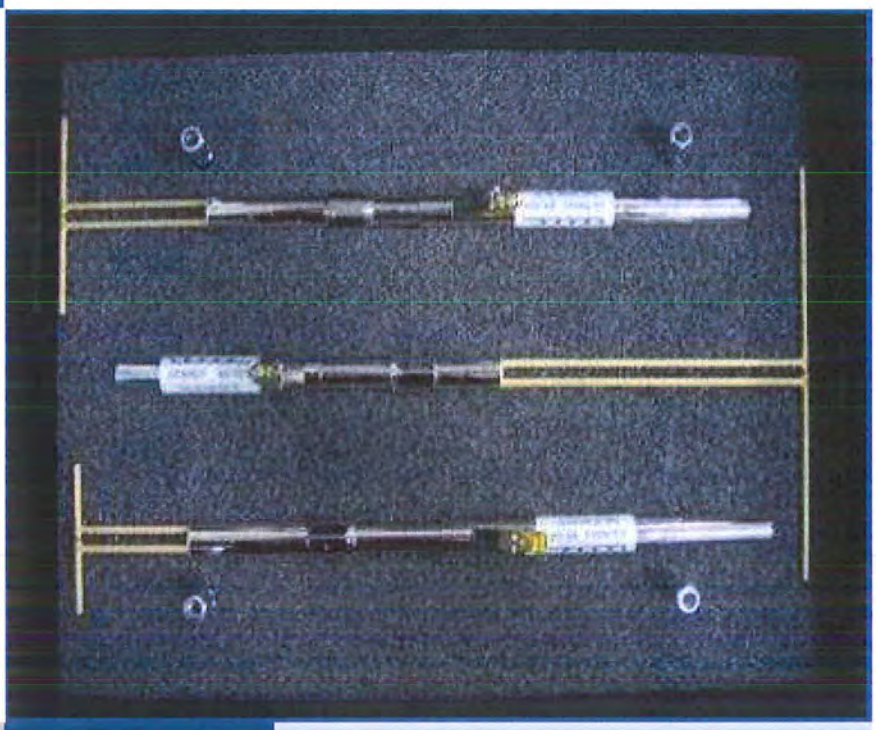

Report No.:	LW-SZ2120037-701
EUT Type:	SAR Validation Dipole
Model Name:	D835V2, D1750V2 , D1900V2, D2450V2, D2600V2, D5GHzV2,
Brand Name:	Speag
Test Conclusion:	Pass
Test Date:	Sep. 12, 2019 ~ Feb. 04, 2021
Date of Issue:	Feb. 05, 2021

Tested by: Zong Liyao (Engineer)

Approved by: Liao Jianming (Technical Director)

NOTE: This test report can be duplicated completely for the legal use with the approval of the applicant; it shall not be reproduced except in full, without the written approval of Shenzhen BALUN Technology Co., Ltd. BALUN Laboratory. Any objections should be raised within thirty days from the date of issue. To validate the report, please contact us.

Block B, 1st FL,Baisha Science and Technology Park, Shahe Xi Road, Nanshan District, Shenzhen, Guangdong, P. R. China 518055
TEL: +86-755-66850100, FAX: +86-755-61824271
Email: info@baluntek.com
www.baluntek.com

1 GENERAL INFORMATION

1.1 Introduction

This document contains a summary of the requirements set forth by the IEEE 1528, FCC KDB 865664 D01 for reference dipoles used for SAR measurement system validations. Instead of the typical annual calibration recommended by measurement standards, the reference dipoles were demonstrated that the SAR target, impedance and return loss have remain stable, so the longer calibration interval is acceptable.

1.2 General Description for Equipment under Test (EUT)

EUT Type	DASY 5 Reference Dipoles
Manufacturer	Speag

Parameter	EUT 1	EUT 2	EUT 3	EUT 4	EUT 5	EUT 6
Model	D835V2	D1750V2	D1900V2	D2450V2	D2600V2	D5GHzV2
Frequency	835 MHz	1750 MHz	1900 MHz	2450MHz	2600 MHz	5GHz-6GHz
Serial Number	SN 4d187	SN 1130	SN 5d193	SN 952	SN 1095	SN 1200
Product Condition (New/ Used)	Used	Used	Used	Used	Used	Used
Last Cal. Date	2019/6/11	2019/09/12	2019/6/11	2019/6/10	2019/11/04	2020/2/17
Current meas. Date	2020/6/01	2020/09/08	2020/6/01	2020/6/02	2020/11/01	2021/2/04

1.3 EUT Photos

D835V2
D1750V2
D1900V2
D2450V2
D2600V2

D5GHzV2

2 DIPOLE IMPEDANCE AND RETURN LOSS

The dipoles are designed to have low return loss when presented against a flat phantom at the specified distance. A Vector Network Analyser was used to perform a return loss measurement on the specific dipole when in the measurement location against the phantom and the distance was specified by the manufacturer with a special, low loss and low relative permittivity spacer.
The impedance was measured at the SMA-connector with the network analyser.

The measurement of verification with return loss should not deviate by more than 20% and minimum of 20 dB of the return loss, and the impedance (real or imaginary parts) should not deviate by more than 5 Ohms from the previous measurement using network analyzer.

Note:
The “Previous Meas.” in the following table refer to dipoles or other equivalent RF sources calibration reports.

2.1 D835V2

RETURN LOSS AND IMPEDANCE IN HEAD LIQUID

Meas. Results	Current Meas.	Previous Meas.	Max. Deviation
Return Loss(dB)	-30.227	-28.95	-4.41%
Impedance	47.953Ω – 0.843 jΩ	51.919 Ω - 3.091jΩ	-3.966Ω (Real part)

Return Loss

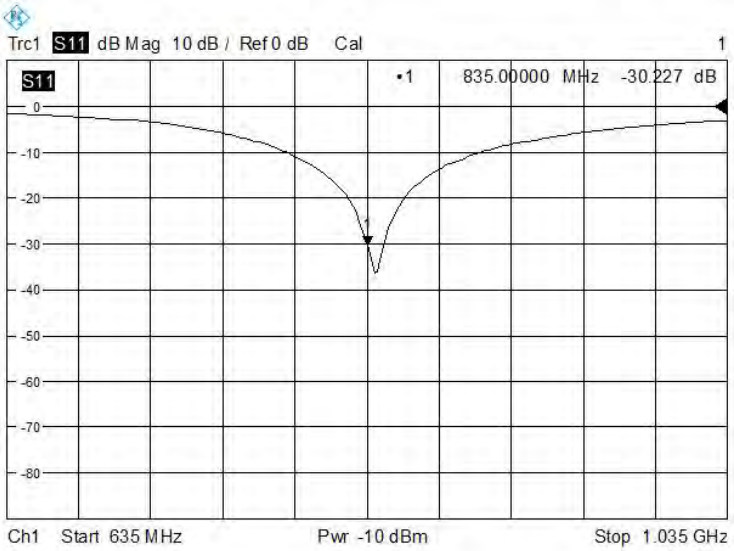

Impedance

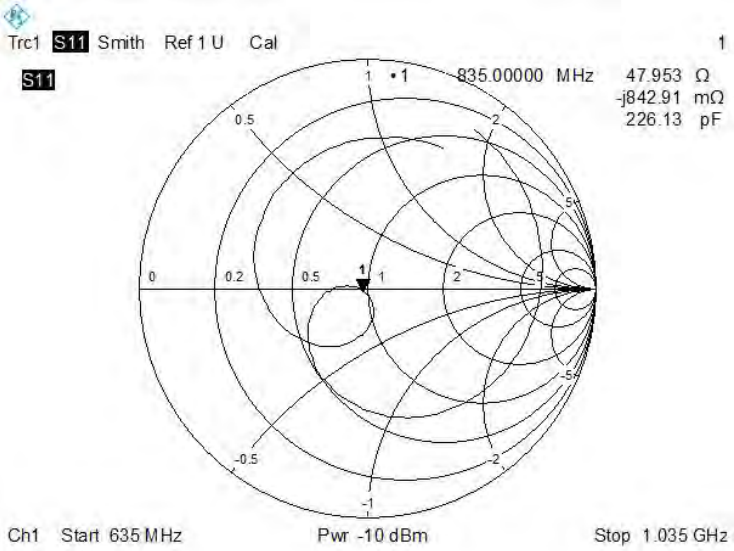

RETURN LOSS AND IMPEDANCE IN BODY LIQUID

Meas. Results	Current Meas.	Previous Meas.	Max. Deviation
Return Loss(dB)	-24.238	-24.864	2.518%
Impedance	46.906 Ω - 0.336 jΩ	47.302 Ω - 4.868 jΩ	4.532Ω (Imaginary part)

Return Loss

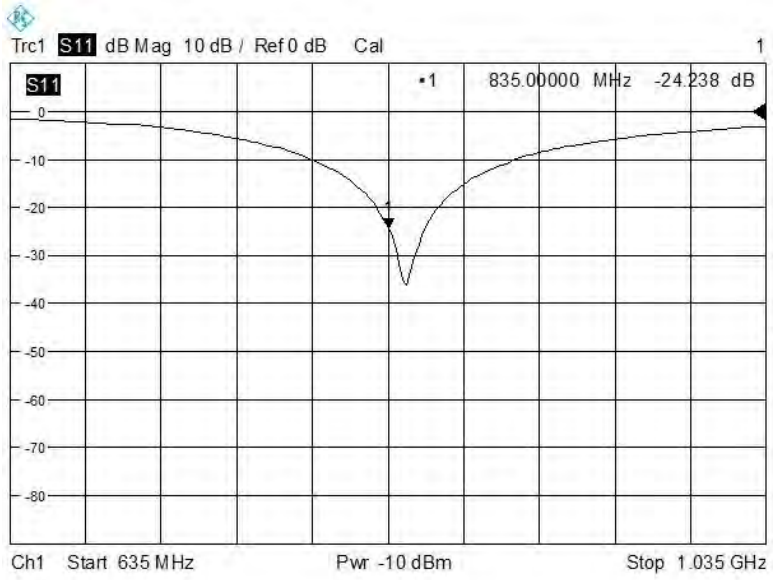

Impedance

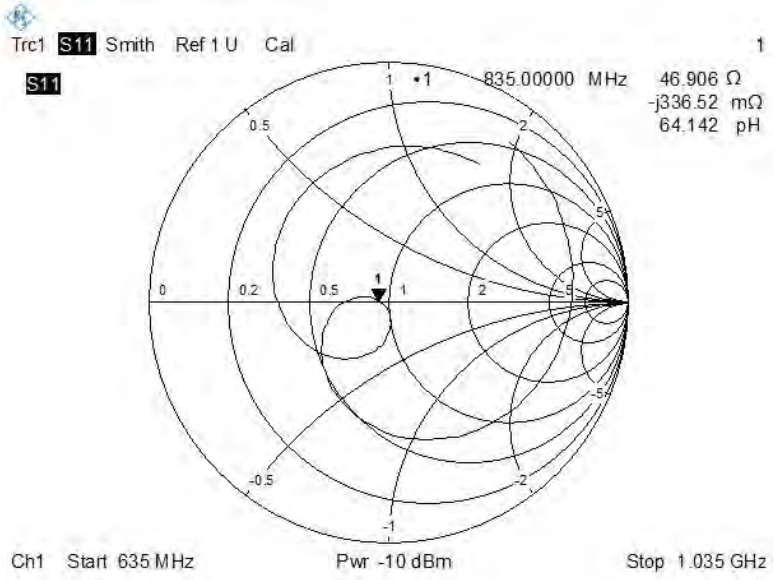

2.2 3.3 D1750V2

RETURN LOSS AND IMPEDANCE IN HEAD LIQUID

Meas. Results	Current Meas.	Previous Meas.	Max. Deviation
Return Loss(dB)	-34.478	-32.43	6.32%
Impedance	47.096 Ω -0.334 jΩ	50.193 Ω - 2.388 jΩ	3.097Ω (Real part)

Return Loss

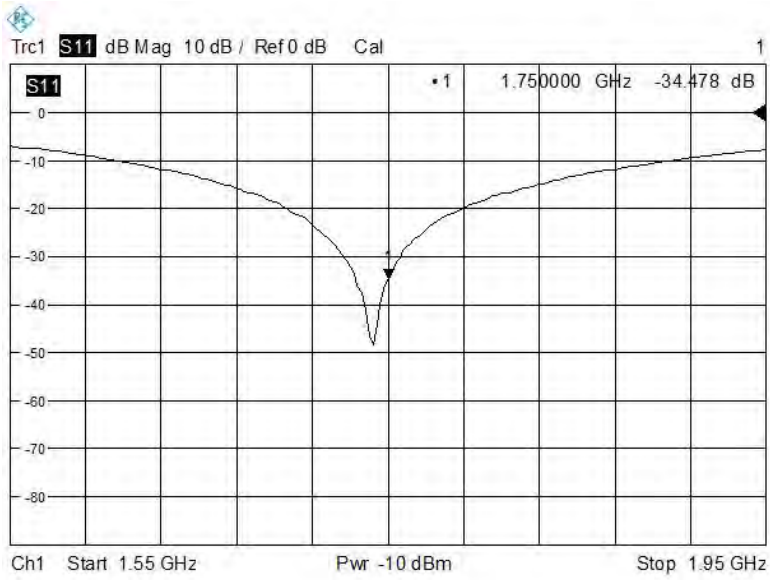

Impedance

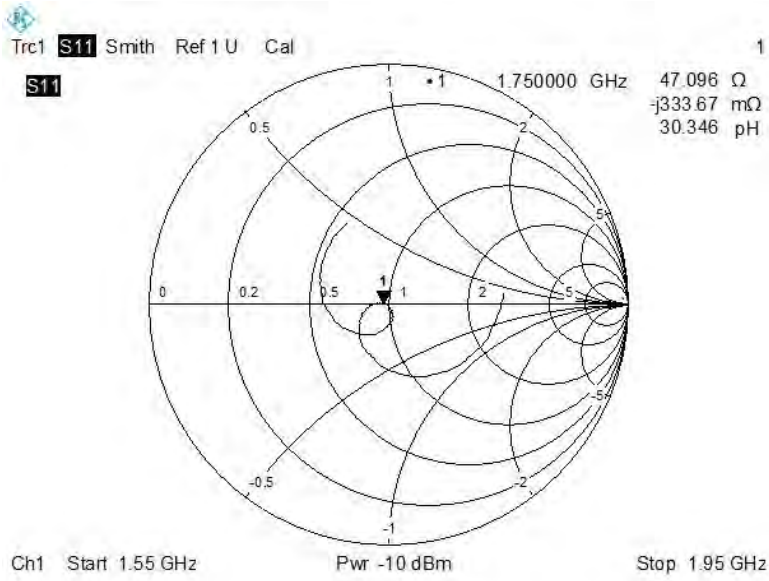

RETURN LOSS AND IMPEDANCE IN BODY LIQUID

Meas. Results	Current Meas.	Previous Meas.	Max. Deviation
Return Loss(dB)	-25.272	-24.825	1.81%
Impedance	46.763 Ω +0.612 jΩ	45.20 Ω - 2.611 jΩ	3.223Ω (Real part)

Return Loss

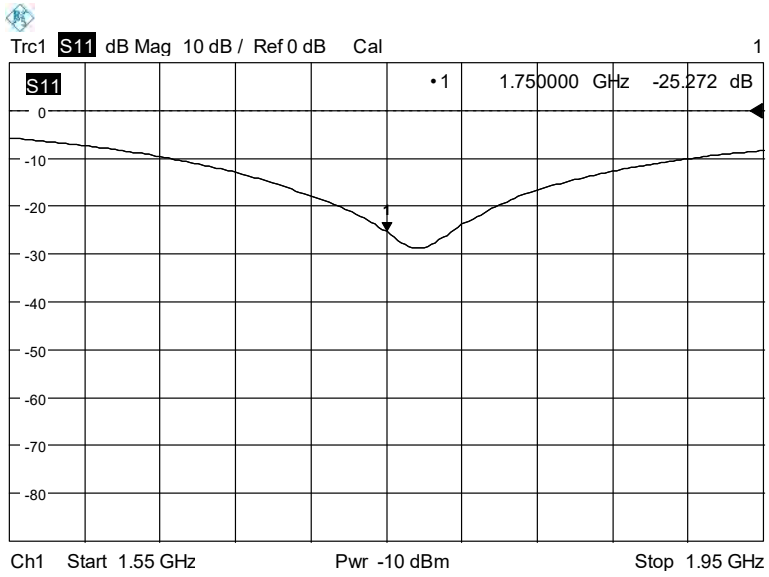

Impedance

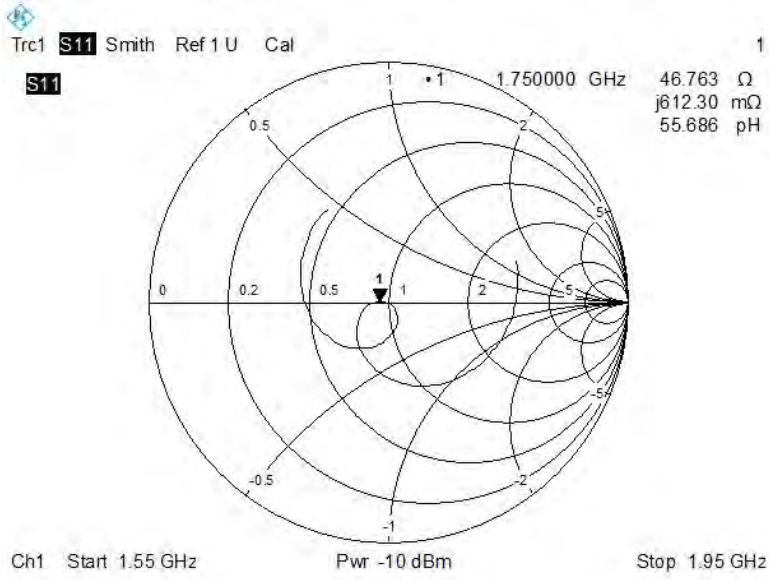

2.3 D1900V2

RETURN LOSS AND IMPEDANCE IN HEAD LIQUID

Meas. Results	Current Meas.	Previous Meas.	Max. Deviation
Return Loss(dB)	-24.945	-24.339	2.49%
Impedance	47.949 Ω + 4.221 jΩ	51.748 Ω + 5.933 jΩ	3.799Ω (Real part)

Return Loss

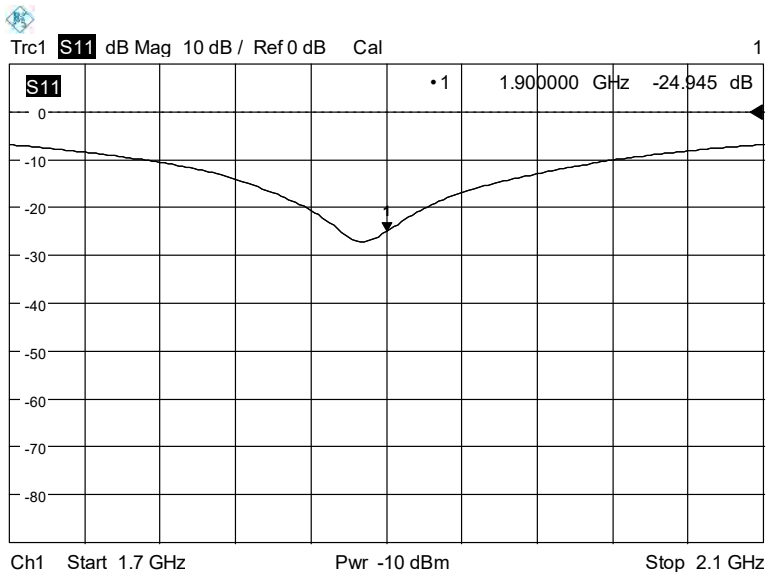

Impedance

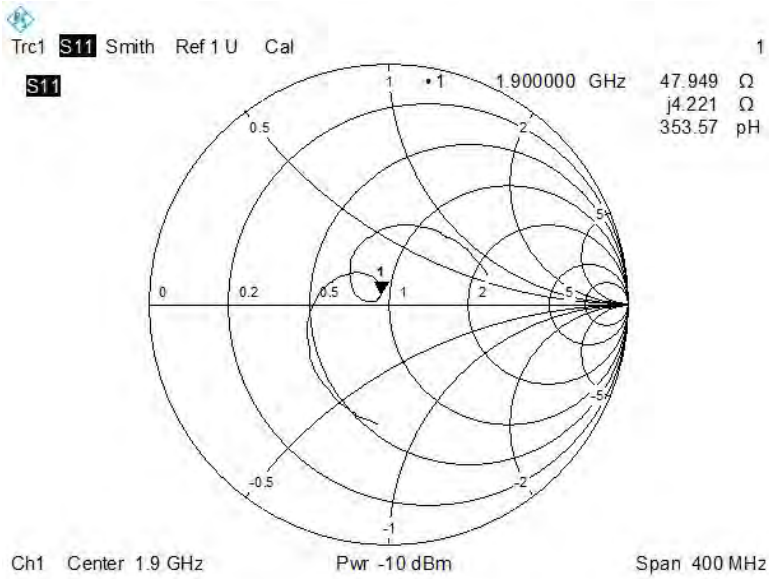

RETURN LOSS AND IMPEDANCE IN BODY LIQUID

Meas. Results	Current Meas.	Previous Meas.	Max. Deviation
Return Loss(dB)	-25.822	-24.704	4.53%
Impedance	48.893 Ω + 5.253 jΩ	47.771 Ω + 5.242 jΩ	1.122Ω (Real part)

Return Loss

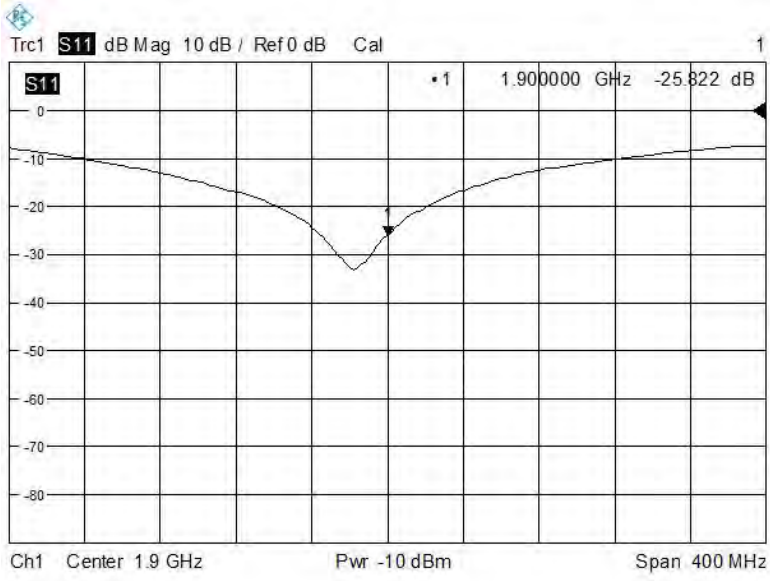

Impedance

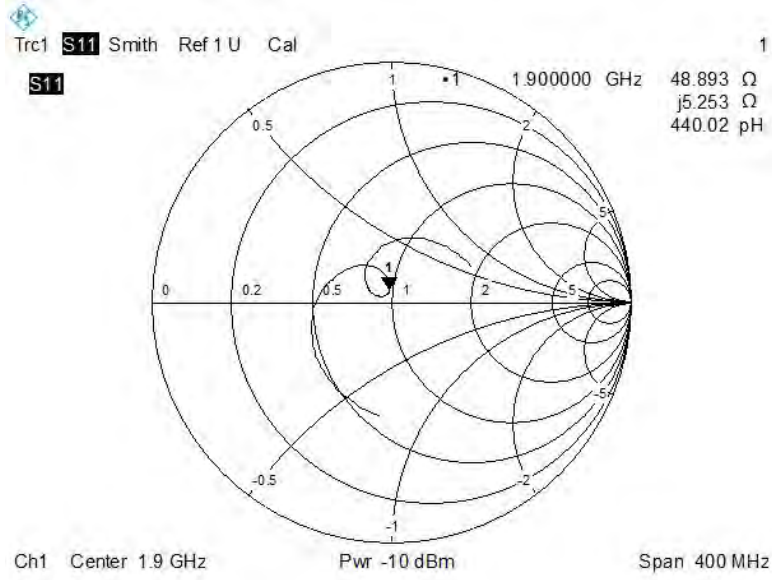

2.4 D2450V2

RETURN LOSS AND IMPEDANCE IN HEAD LIQUID

Meas. Results	Current Meas.	Previous Meas.	Max. Deviation
Return Loss(dB)	-27.485	-26.753	2.74%
Impedance	49.517 Ω + 1.508 jΩ	54.071 Ω + 2.513 jΩ	4.554Ω (Real part)

Return Loss

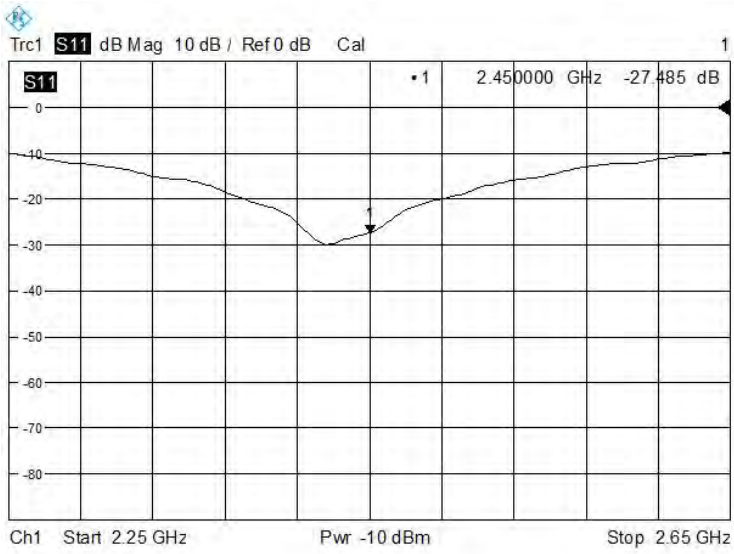

Impedance

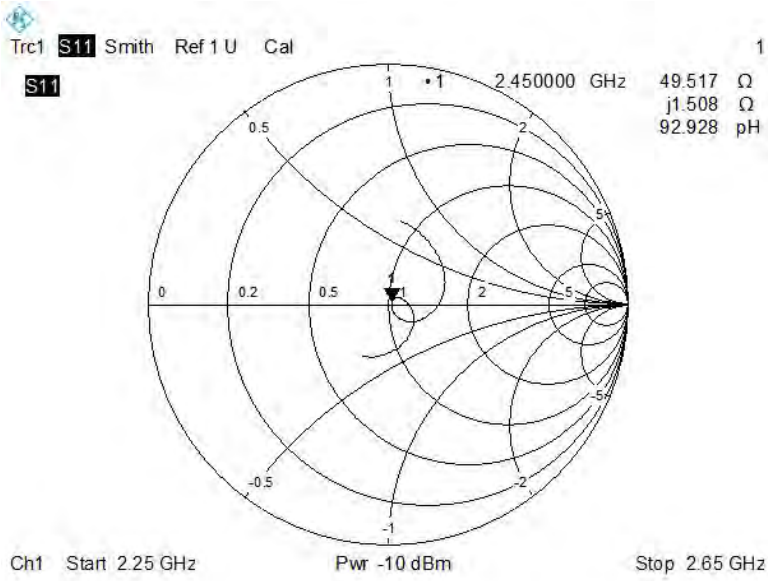

RETURN LOSS AND IMPEDANCE IN BODY LIQUID

Meas. Results	Current Meas.	Previous Meas.	Max. Deviation
Return Loss (dB)	-28.012	-27.882	0.47%
Impedance	49.496 Ω + 1.998 jΩ	52.349 Ω + 3.40 jΩ	2.853Ω (Imaginary part)

Return Loss

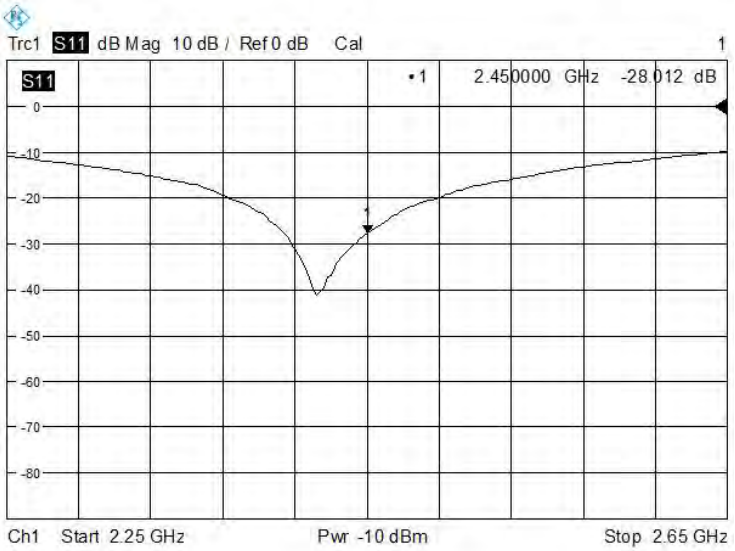

+Impedance

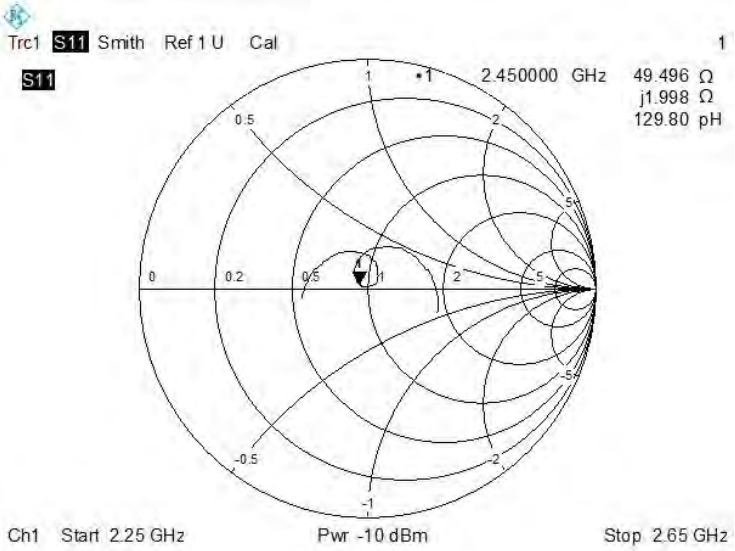

2.5 D2600V2

RETURN LOSS AND IMPEDANCE IN HEAD LIQUID

Meas. Results	Current Meas.	Previous Meas.	Max. Deviation
Return Loss(dB)	-22.192	-25.784	13.93%
Impedance	46.754 Ω -7.288 jΩ	49.443 Ω -5.089jΩ	2.689Ω (Real part)

Return Loss

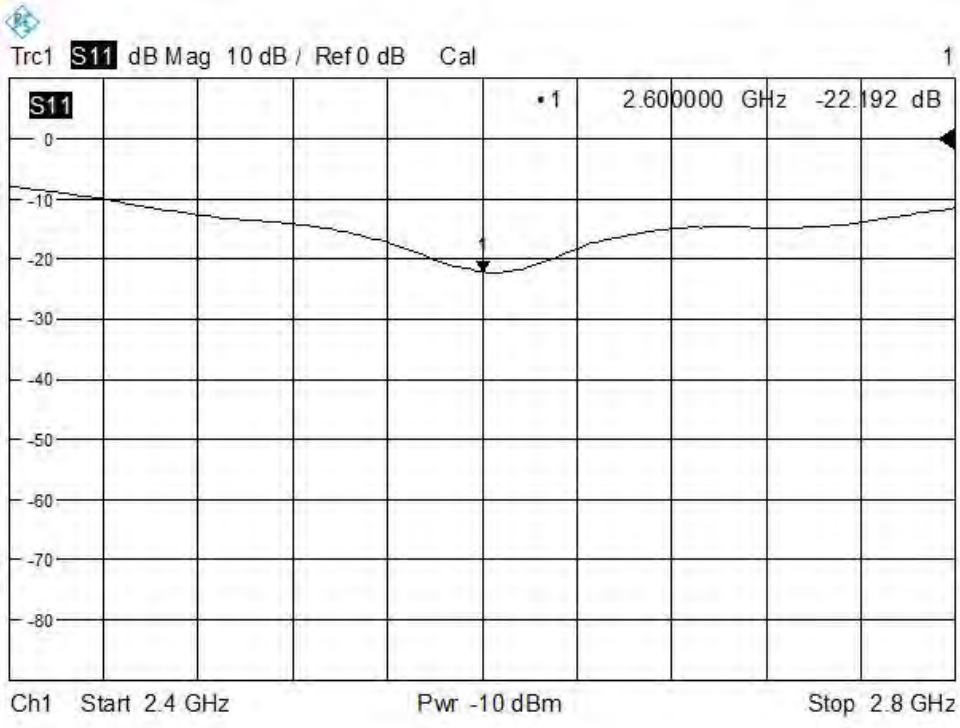

Impedance

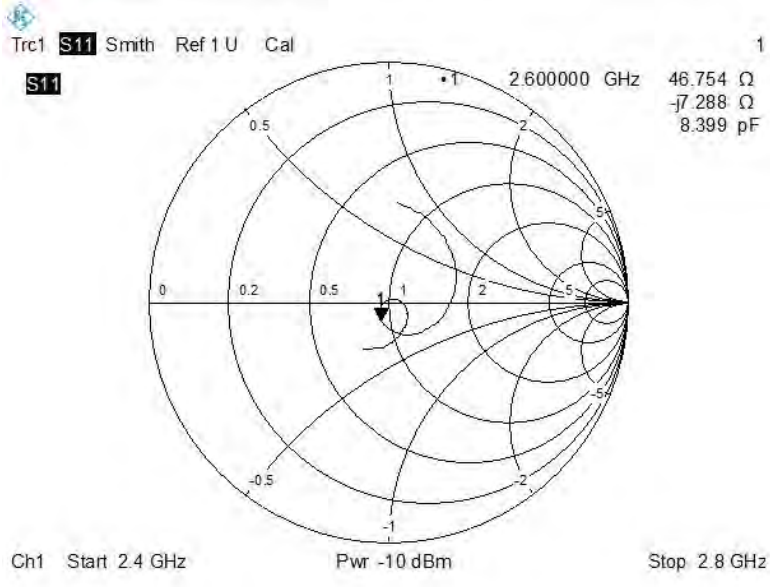

RETURN LOSS AND IMPEDANCE IN BODY LIQUID

Meas. Results	Current Meas.	Previous Meas.	Max. Deviation
Return Loss(dB)	-22.192	-23.544	5.74%
Impedance	46.334 Ω -5.883 jΩ	46.722 Ω -5.546 jΩ	0.388Ω (Real part)

Return Loss

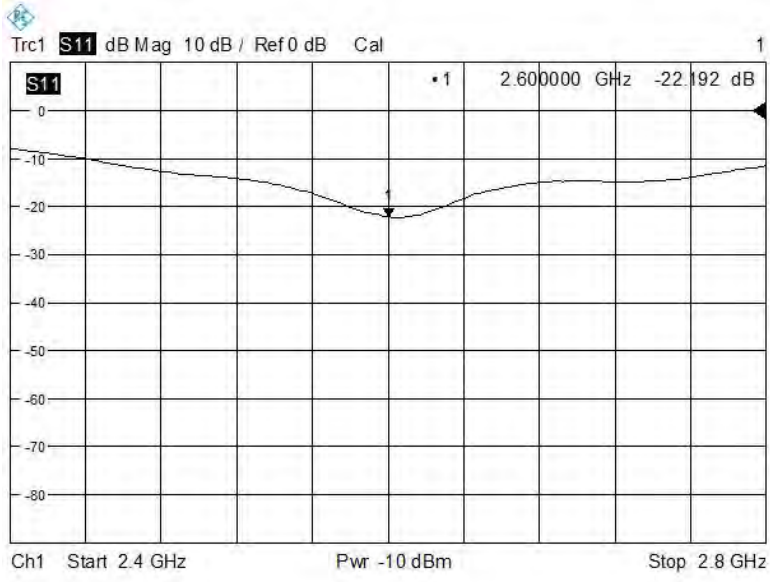

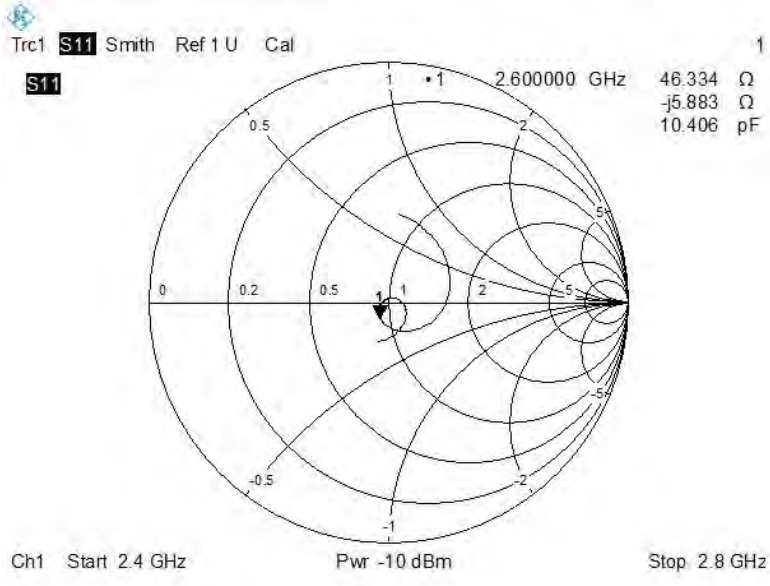

Impedance

2.6 D5GHzV2

RETURN LOSS AND IMPEDANCE IN HEAD LIQUID

Meas. Results	Current Meas.	Previous Meas.	Max. Deviation
5200 MHz			
Return Loss(dB)	-30.669	-26.768	14.57%
Impedance	50.269 Ω -2.356 jΩ	48.076 Ω -4.072 jΩ	2.193Ω (Real part)
5300 MHz			
Return Loss(dB)	-28.296	-24.513	15.43%
Impedance	47.685 Ω -3.310 jΩ	44.645 Ω -1.737 jΩ	3.040Ω (Real part)
5500 MHz			
Return Loss(dB)	-27.984	-25.270	10.74%
Impedance	50.879 Ω -2.682 jΩ	51.294 Ω -5.376 jΩ	2.694Ω (Imaginary part)
5600 MHz			
Return Loss(dB)	-25.490	-25.588	0.38%
Impedance	54.259 Ω +2.606jΩ	55.495 Ω +0.732 jΩ	1.874Ω (Imaginary part)
5800 MHz			
Return Loss(dB)	-29.226	-28.185	3.69%
Impedance	47.116 Ω -2.192 jΩ	49.545 Ω -3.856 jΩ	2.429Ω (Real part)

Return Loss

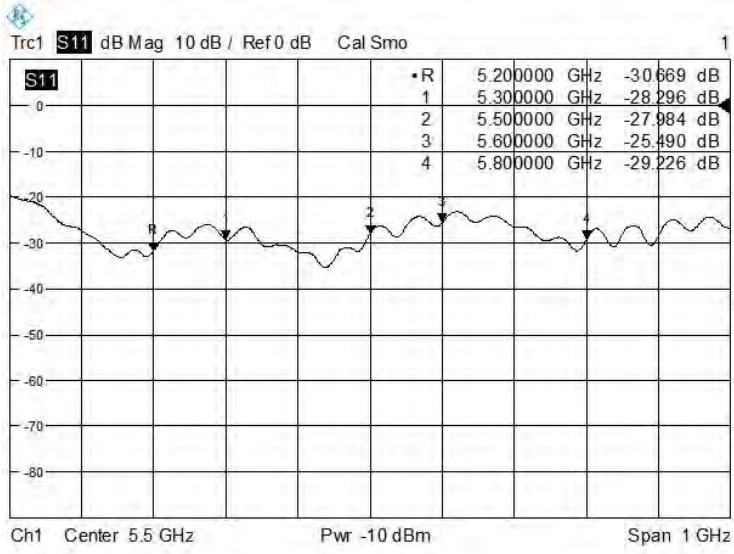

Impedance

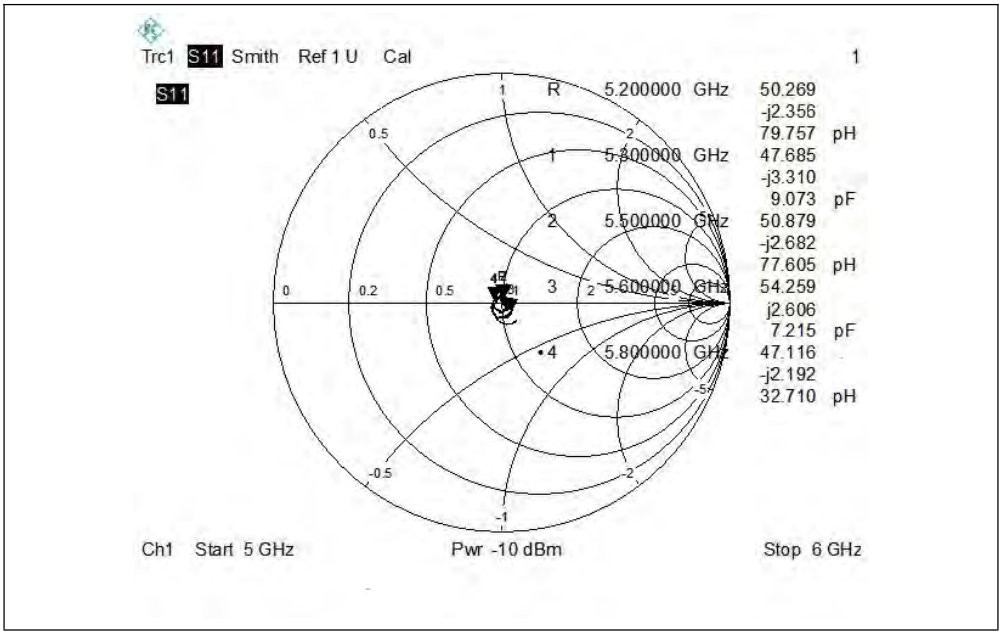

--END OF REPORT--