DWG NO.	SH
828-5676-101	1

REVISIONS

LTR	DESCRIPTION	DATE	APVD
B	BV6370	10/21/99	C.F.

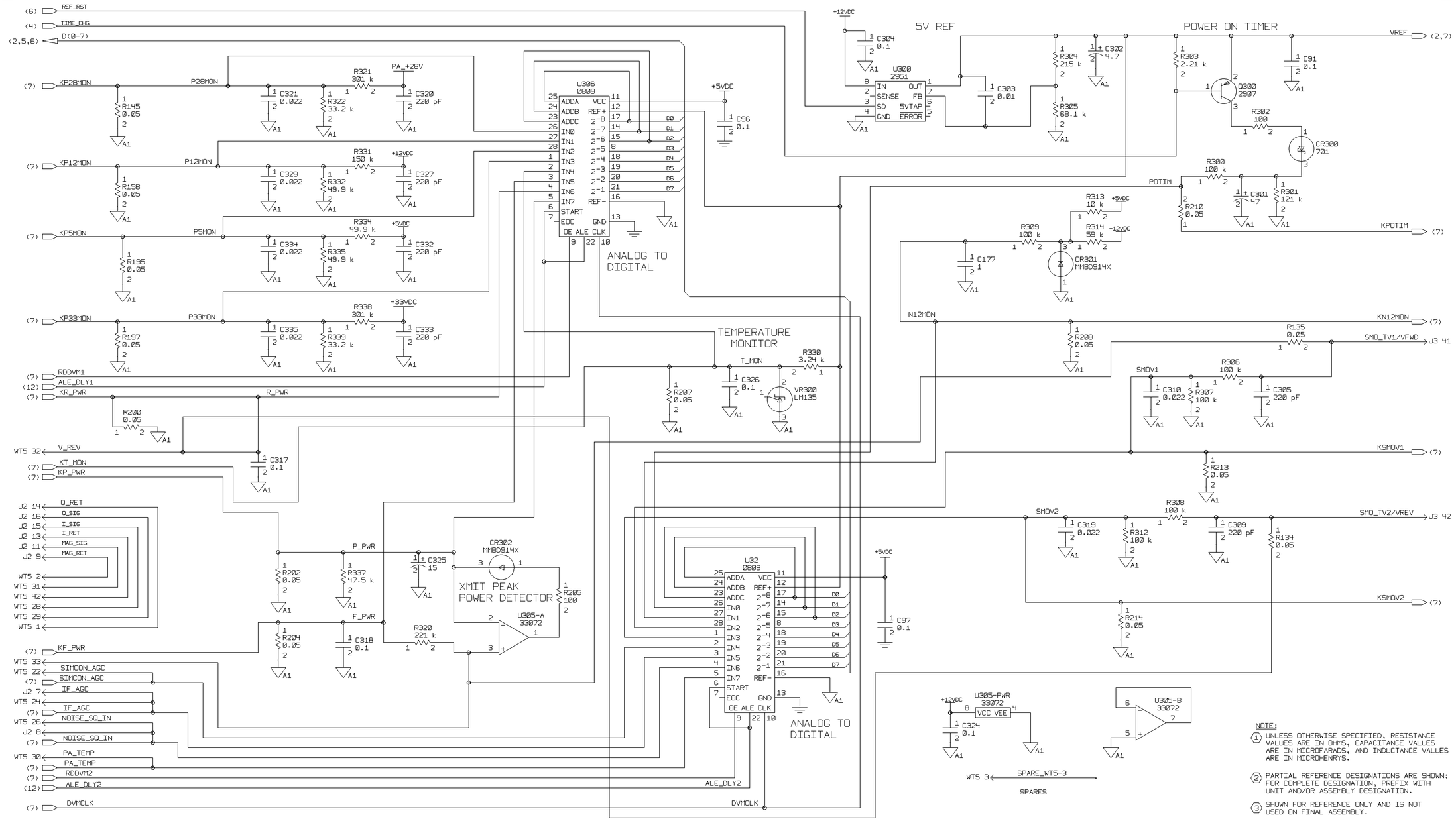

NOTE:

1. UNLESS OTHERWISE SPECIFIED, RESISTANCE VALUES ARE IN OHMS, CAPACITANCE VALUES ARE IN MICROFARADS, AND INDUCTANCE VALUES ARE IN MICROHENRYS.
2. PARTIAL REFERENCE DESIGNATIONS ARE SHOWN; FOR COMPLETE DESIGNATION, PREFIX WITH UNIT AND/OR ASSEMBLY DESIGNATION.
3. SHOWN FOR REFERENCE ONLY AND IS NOT USED ON FINAL ASSEMBLY.

THIS DRAWING CREATED FROM RACAL/REDAC DIGITAL DATA

THIS DRAWING IS CREATED FROM DIGITAL DATA

PREP Karen G. Barker	ROCKWELL INTERNATIONAL CORPORATION COLLINS AVIONICS GROUP -COMMERCIAL CEDAR RAPIDS, IA 52498
CHK Al C. Majalka	SCHEMATIC DIAGRAM, SYSTEM PROCESSOR/PWR SUP
ENG APVD F. Studenberg	
NEXT ASSY PART NO. 828-0676-101	SIZE D · CAGE CODE 4V792 · DWG NO. 828-5676-101 · REV LTR -
ROCKWELL PROPRIETARY INFORMATION. · EQUIPMENT TYPE NO. VHF-900B	SCALE NONE · SHEET 1 OF 12

DIGITAL DATA ONLY NO MASTER TRACING 08/30/2000 13:27 NFP ☐ REL ☐ CR 2 MB 0

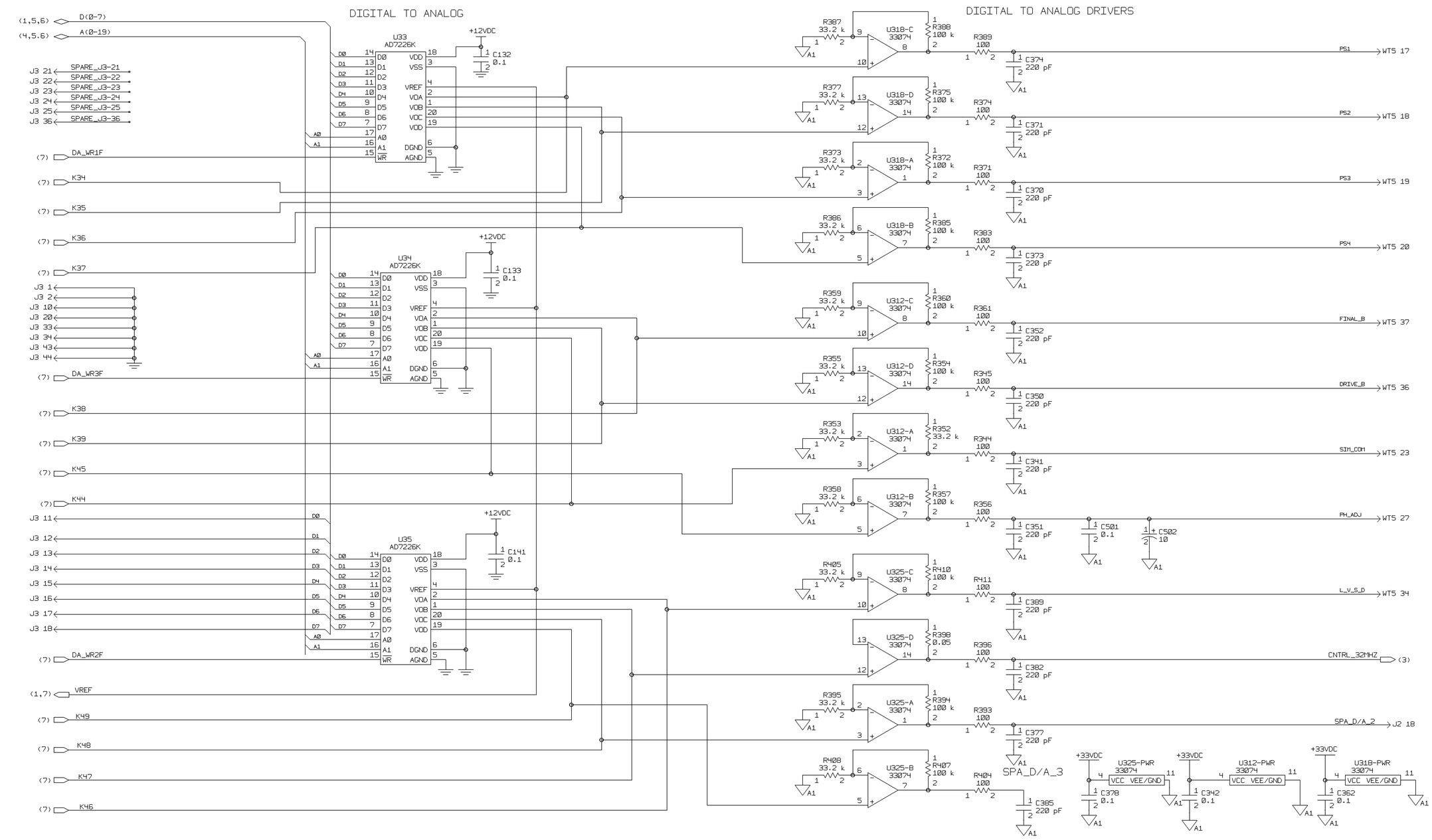

THIS DRAWING CREATED FROM RACAL/REDAC DIGITAL DATA

THIS DRAWING IS CREATED FROM DIGITAL DATA

SIZE	CAGE CODE	DWG NO.	REV LTR
D	4V792	828-5676-101	-

ROCKWELL PROPRIETARY INFORMATION. SCALE NONE SHEET 2

DIGITAL DATA ONLY NO MASTER TRACING 08/30/2000 15:24

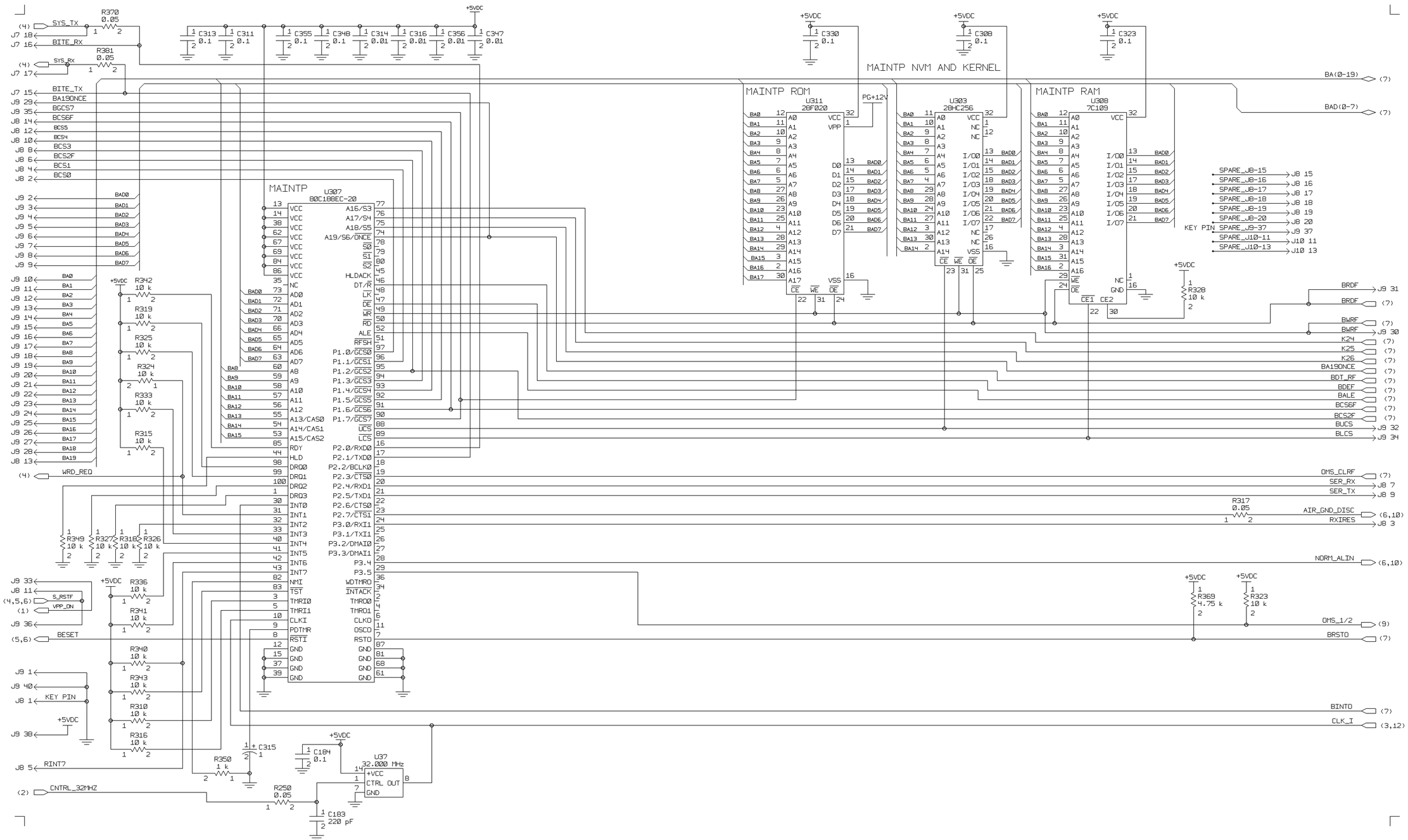

THIS DRAWING IS CREATED FROM DIGITAL DATA

SIZE	CAGE CODE	DWG NO.	REV LTR
D	4V792	828-5676-101	-

ROCKWELL PROPRIETARY INFORMATION. SCALE NONE SHEET 3

DIGITAL DATA ONLY NO MASTER TRACING 08/30/2000 15:25

THIS DRAWING CREATED FROM RACAL/REDAC DIGITAL DATA

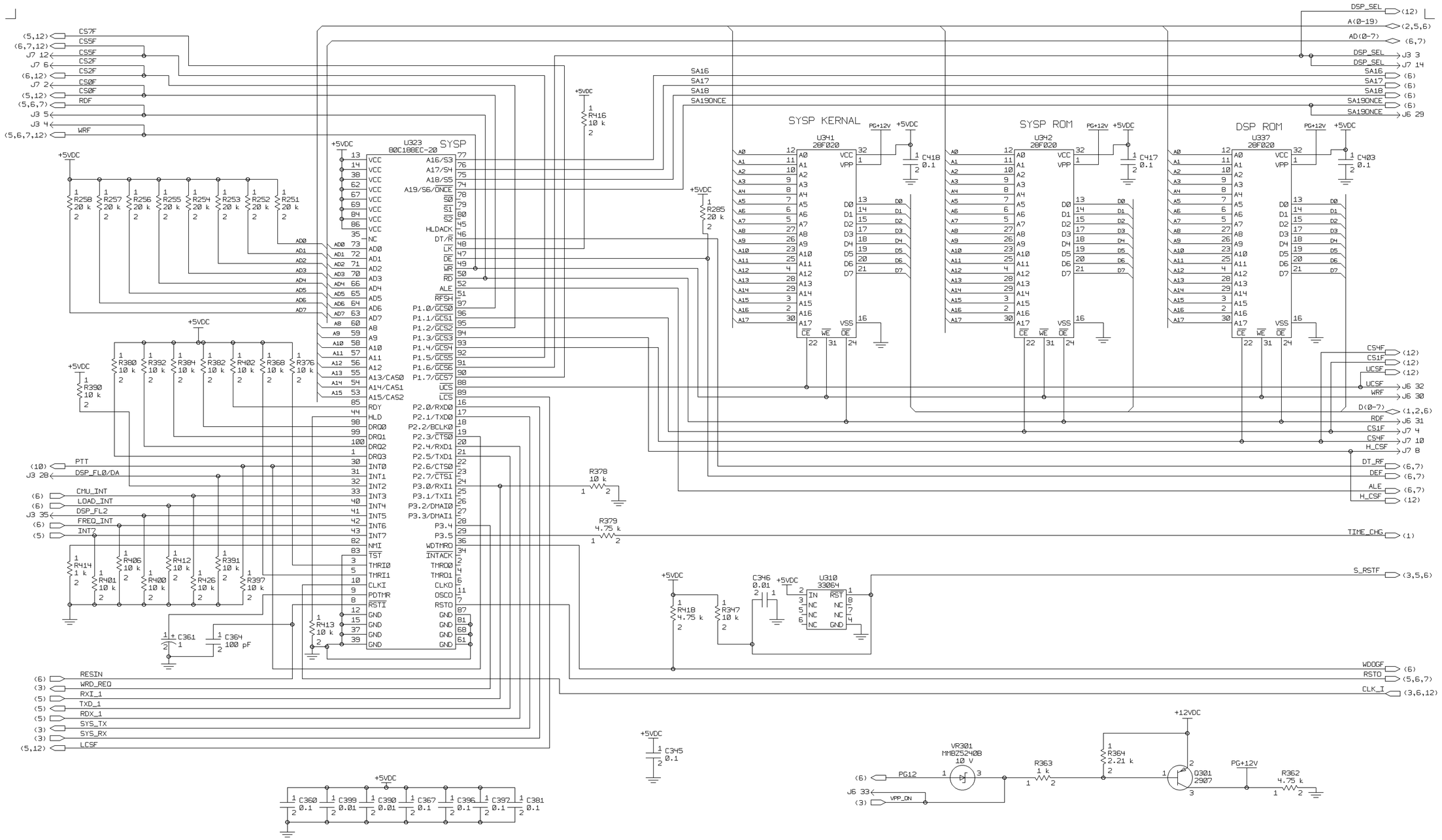

THIS DRAWING CREATED FROM DIGITAL DATA

SIZE	CAGE CODE	DWG NO.	REV LTR
D	4V792	828-5676-101	-

ROCKWELL PROPRIETARY INFORMATION. SCALE NONE SHEET 4

DIGITAL DATA ONLY NO MASTER TRACING 08/30/2000 15:26

THIS DRAWING CREATED FROM RACAL/REDAC DIGITAL DATA

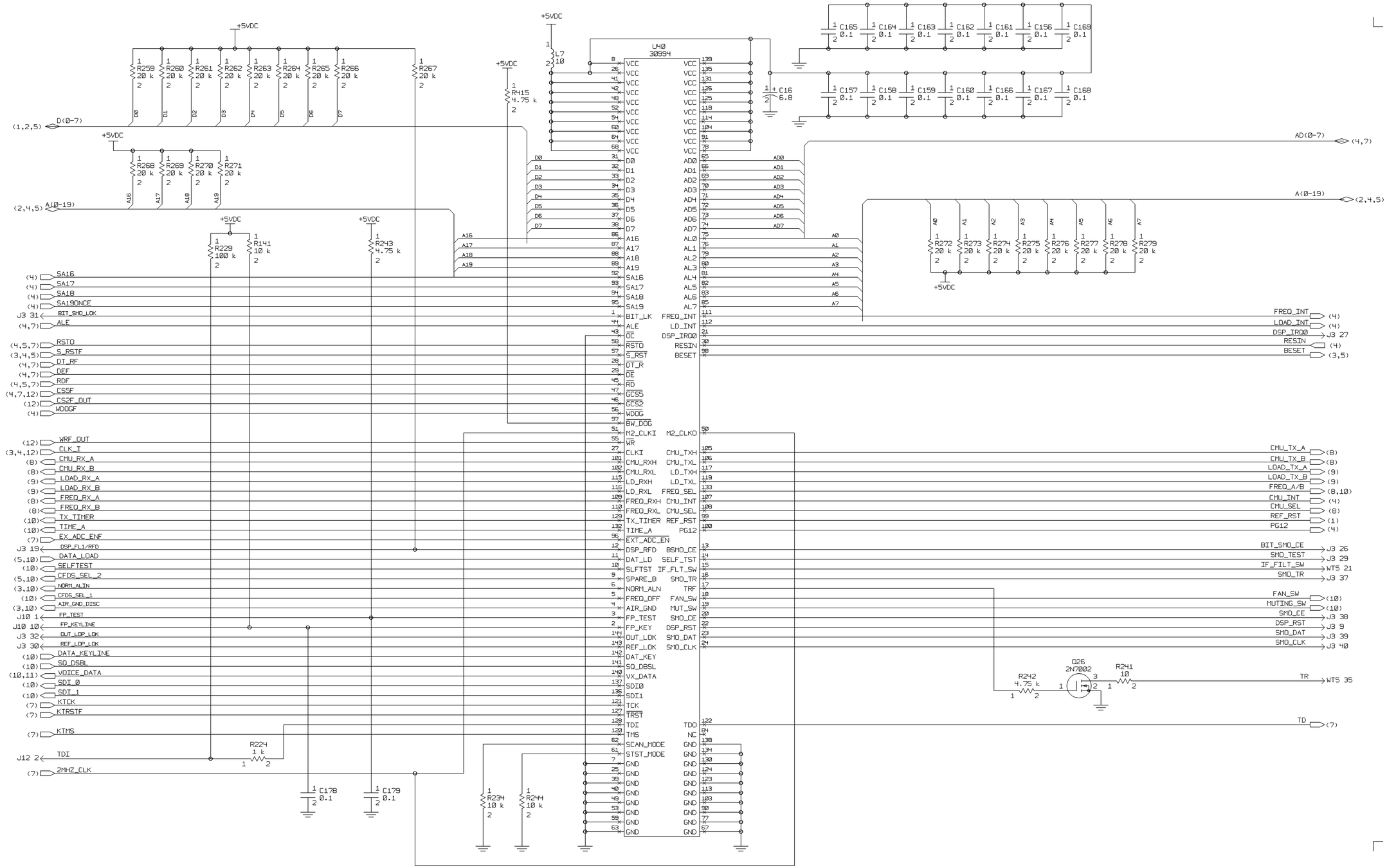

THIS DRAWING IS CREATED FROM DIGITAL DATA

SIZE	CAGE CODE	DWG NO.	REV LTR
D	4V792	828-5676-101	-

ROCKWELL PROPRIETARY INFORMATION. SCALE NONE SHEET 6

DIGITAL DATA ONLY NO MASTER TRACING 08/30/2000 13:29

THIS DRAWING CREATED FROM RACAL/REDAC DIGITAL DATA

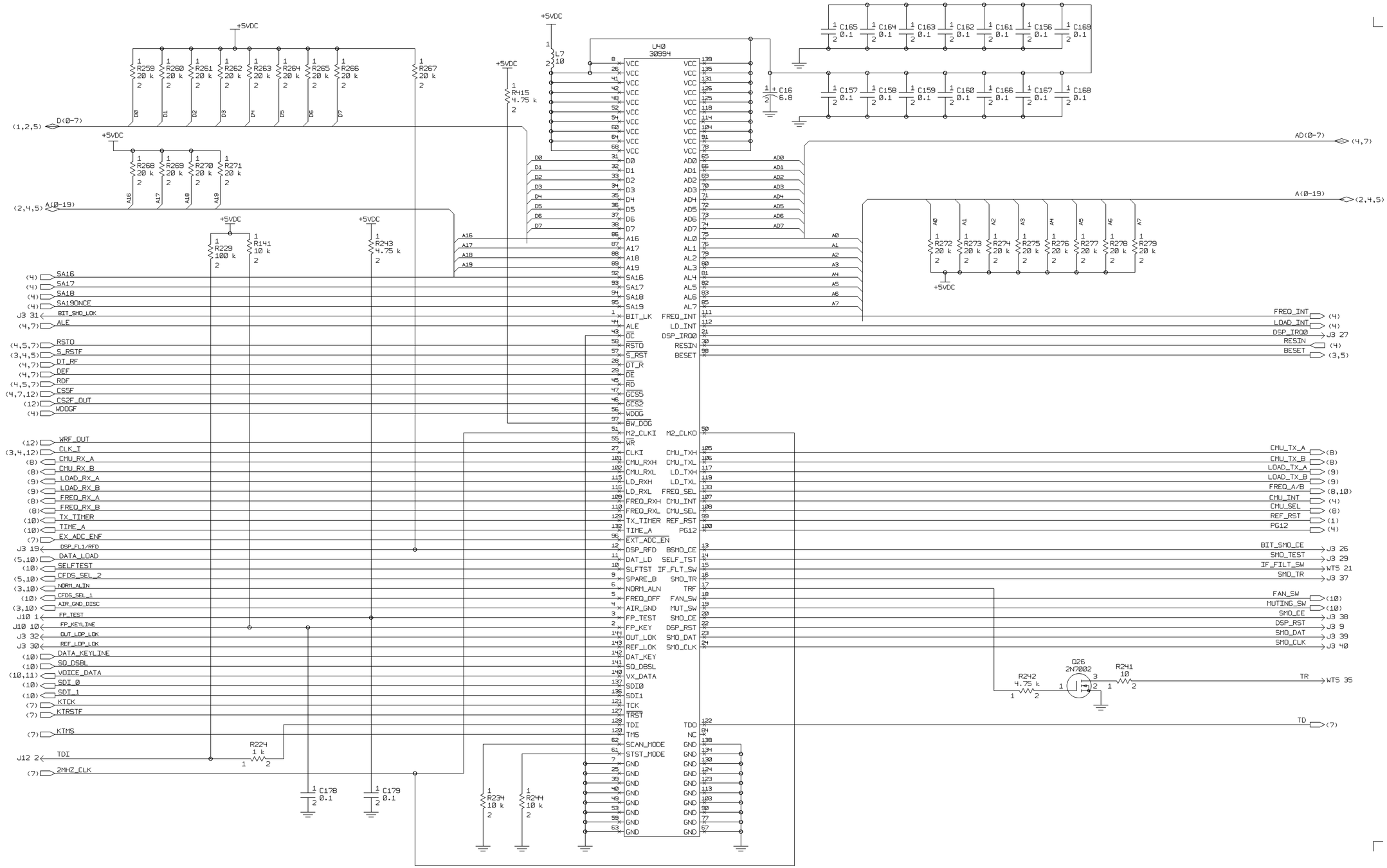

THIS DRAWING IS CREATED FROM DIGITAL DATA

SIZE	CAGE CODE	DWG NO.	REV LTR
D	4V792	828-5676-101	-

ROCKWELL PROPRIETARY INFORMATION. SCALE NONE SHEET 6

DIGITAL DATA ONLY NO MASTER TRACING 08/30/2000 13:29

THIS DRAWING CREATED FROM RACAL/REDAC DIGITAL DATA

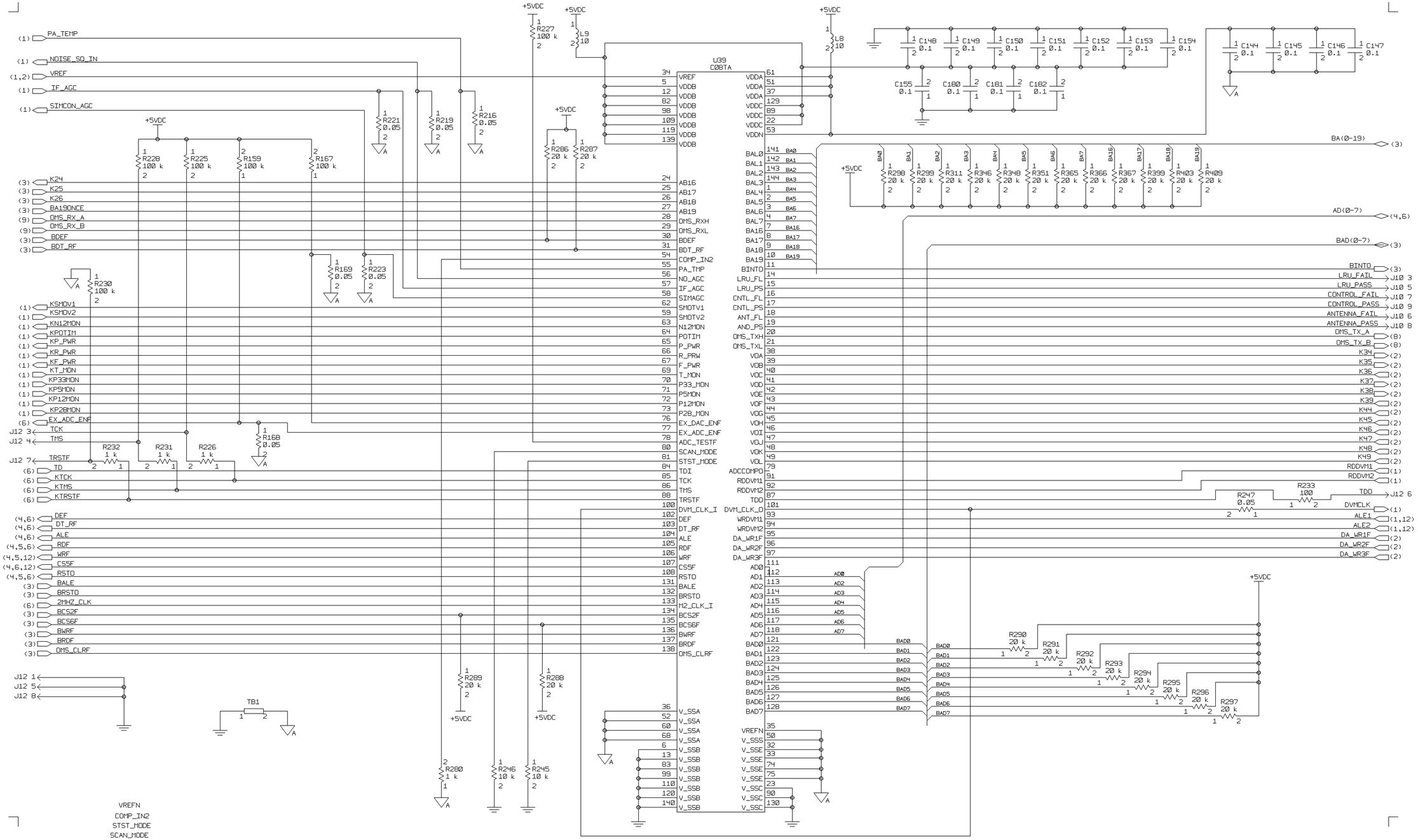

THIS DRAWING CREATED FROM RACAL/REDAC DIGITAL DATA

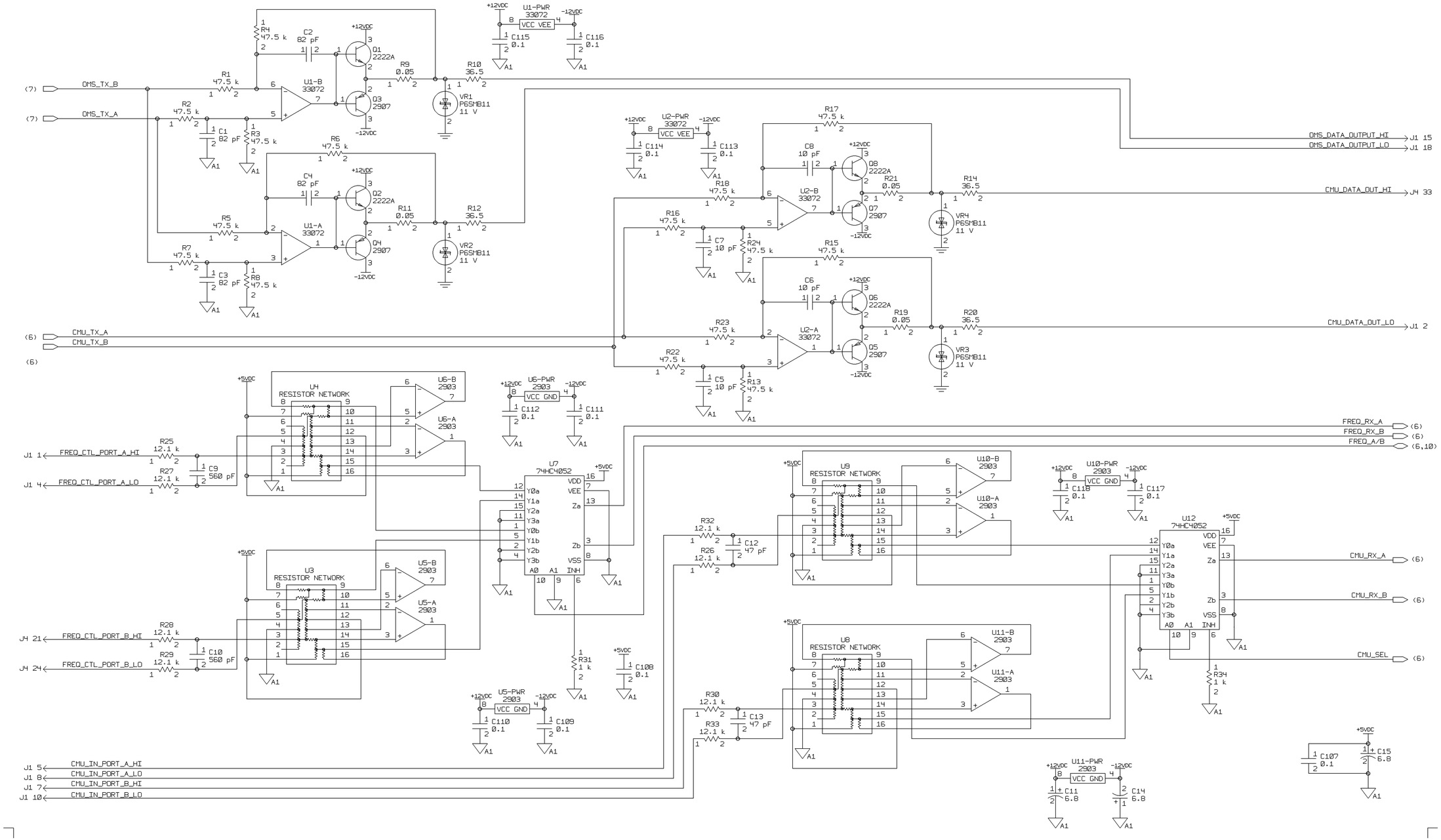

THIS DRAWING CREATED FROM DIGITAL DATA

SIZE	CAGE CODE	DWG NO.	REV LTR
D	4V792	828-5676-101	-

ROCKWELL PROPRIETARY INFORMATION. SCALE NONE SHEET 8

DIGITAL DATA ONLY NO MASTER TRACING 08/30/2000 13:30

THIS DRAWING CREATED FROM RACAL/REDAC DIGITAL DATA

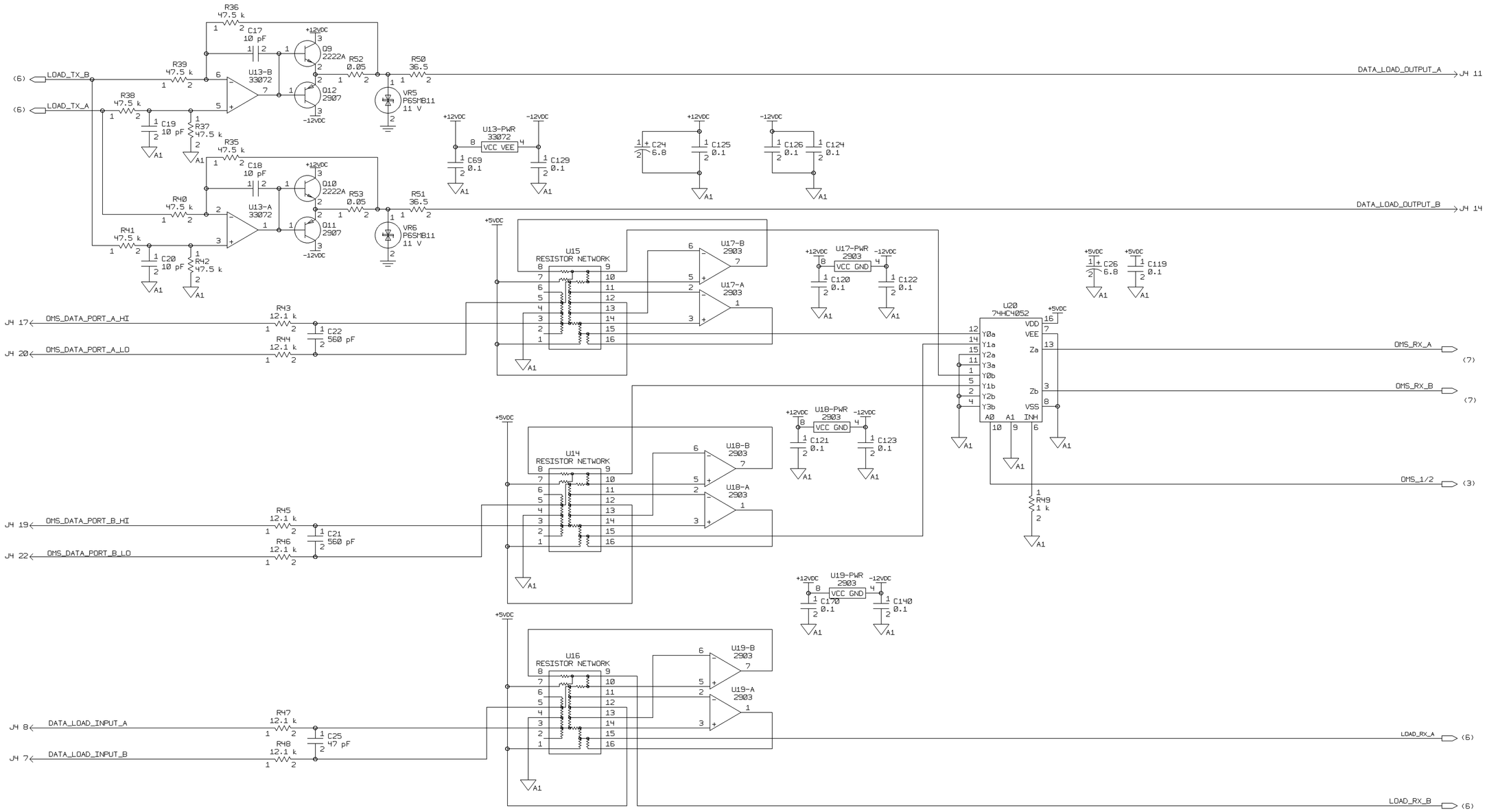

THIS DRAWING CREATED FROM RACAL/REDAC DIGITAL DATA

THIS DRAWING IS CREATED FROM DIGITAL DATA

SIZE	CAGE CODE	DWG NO.	REV LTR
D	4V792	828-5676-101	-

ROCKWELL PROPRIETARY INFORMATION. SCALE NONE SHEET 9

DIGITAL DATA ONLY NO MASTER TRACING 08/30/2000 13:30

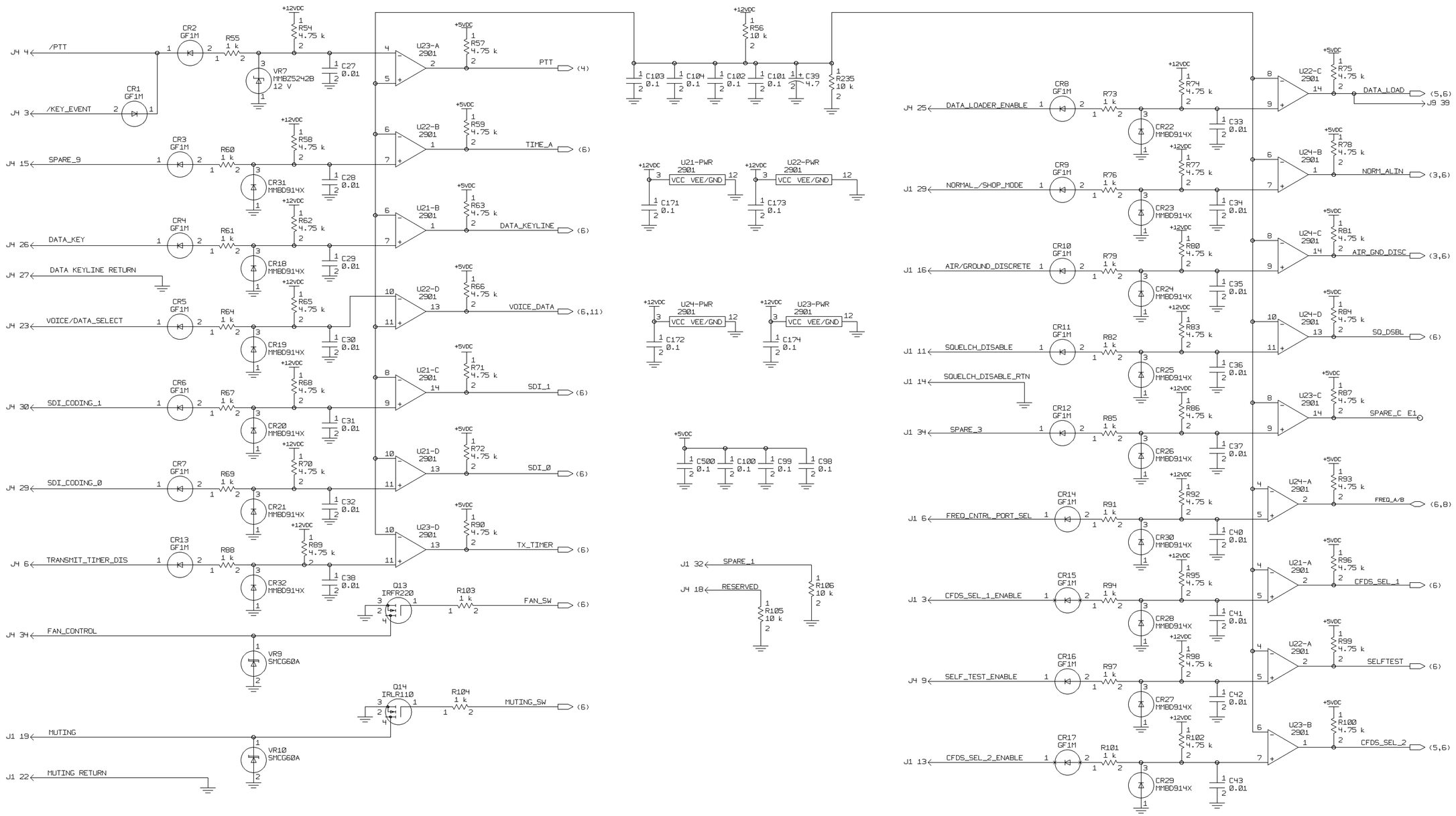

THIS DRAWING CREATED FROM DIGITAL DATA

THIS DRAWING CREATED FROM RACAL/REDAC DIGITAL DATA

SIZE	CAGE CODE	DWG NO.	REV LTR
D	4V792	828-5676-101	-

ROCKWELL PROPRIETARY INFORMATION. SCALE NONE SHEET 10

DIGITAL DATA ONLY NO MASTER TRACING 08/30/2000 13:30

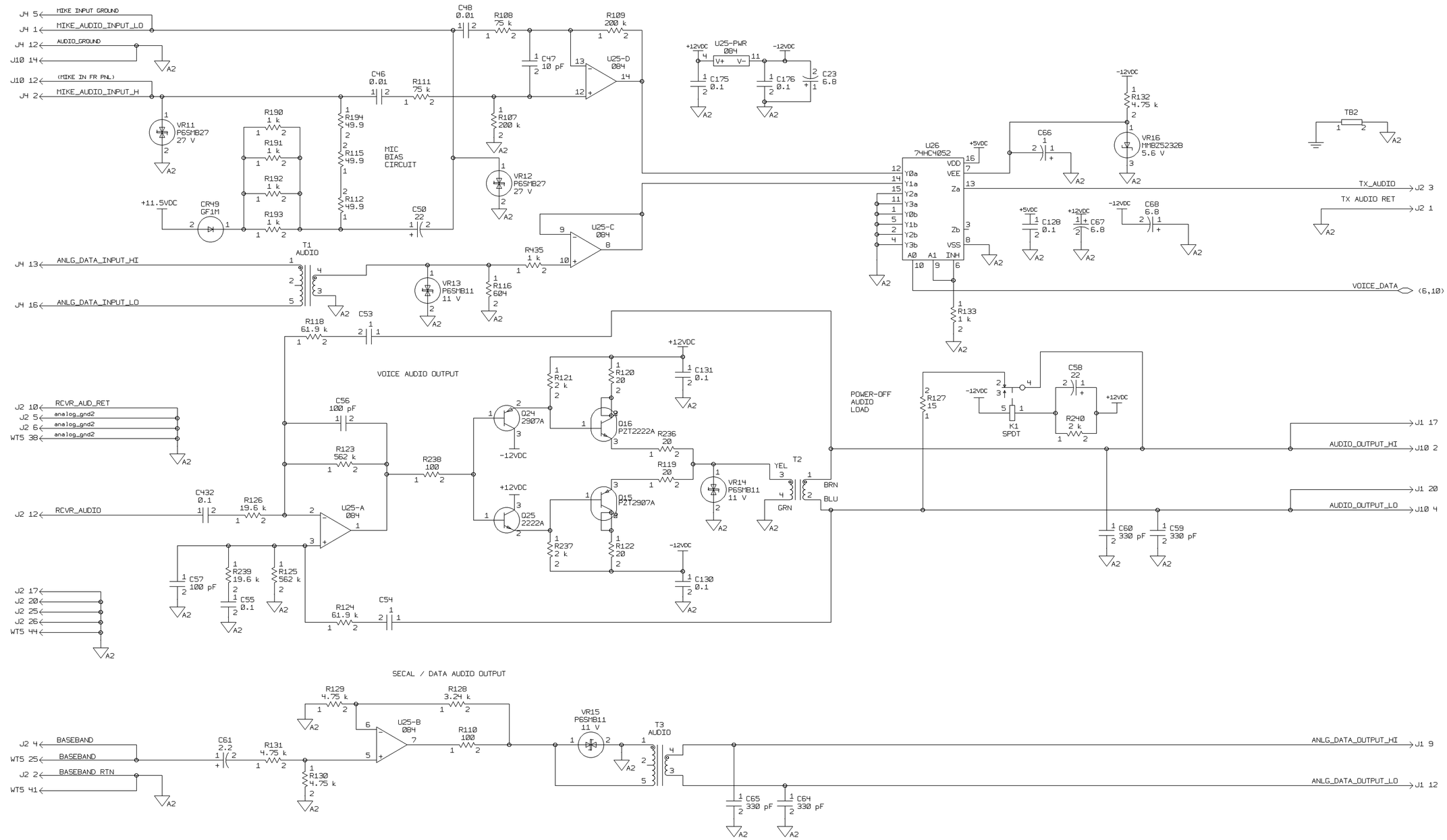

THIS DRAWING IS CREATED FROM DIGITAL DATA

SIZE	CAGE CODE	DWG NO.	REV LTR
D	4V792	828-5676-101	-

ROCKWELL PROPRIETARY INFORMATION. SCALE NONE SHEET 11

DIGITAL DATA ONLY NO MASTER TRACING 08/30/2000 13:31

THIS DRAWING CREATED FROM RACAL/REDAC DIGITAL DATA

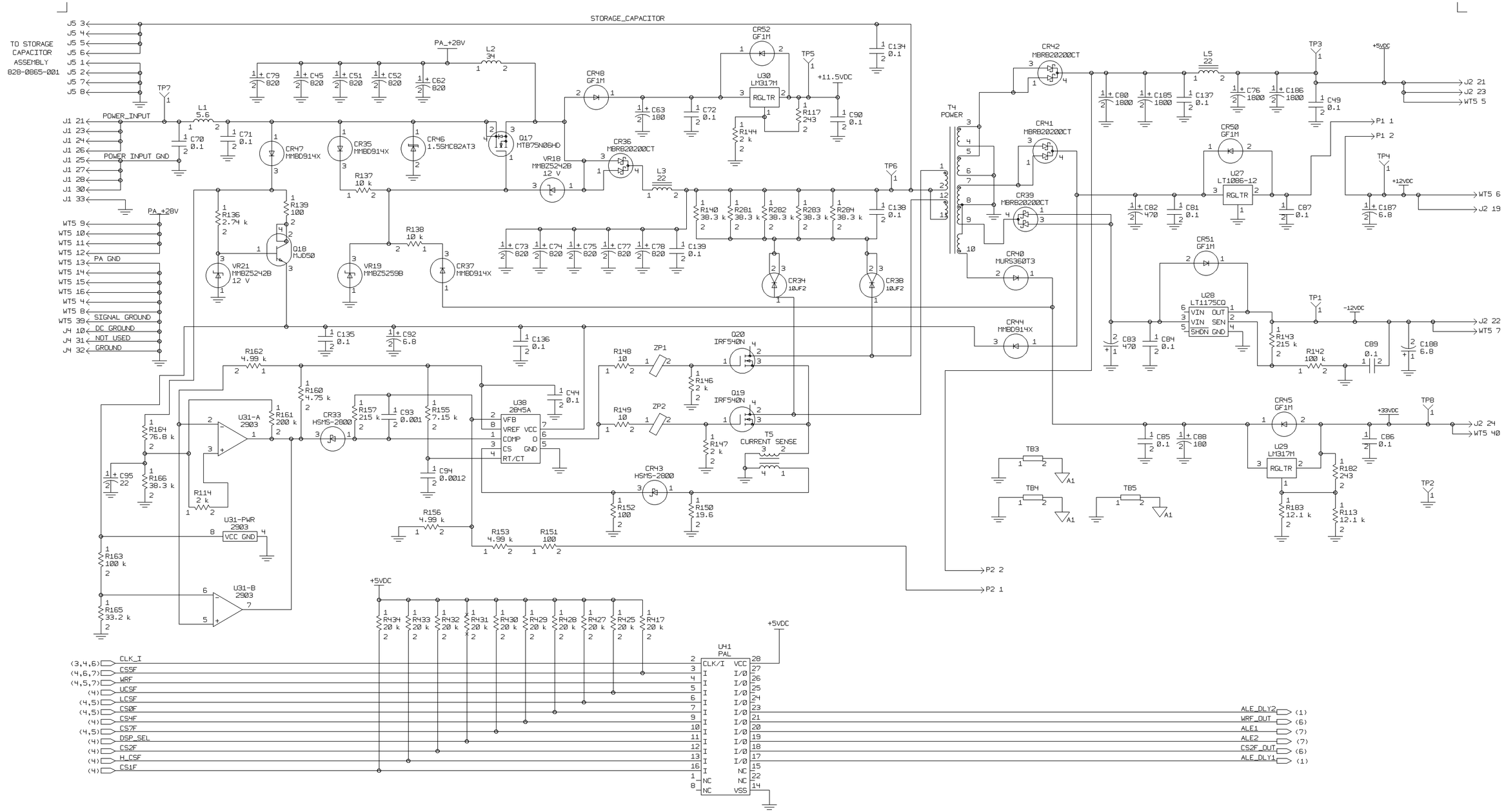

THIS DRAWING IS CREATED FROM DIGITAL DATA

SIZE	CAGE CODE	DWG NO.	REV LTR
D	4V792	828-5676-101	-

ROCKWELL PROPRIETARY INFORMATION. SCALE NONE SHEET 12

DIGITAL DATA ONLY NO MASTER TRACING 08/30/2000 13:31

THIS DRAWING CREATED FROM RACAL/REDAC DIGITAL DATA