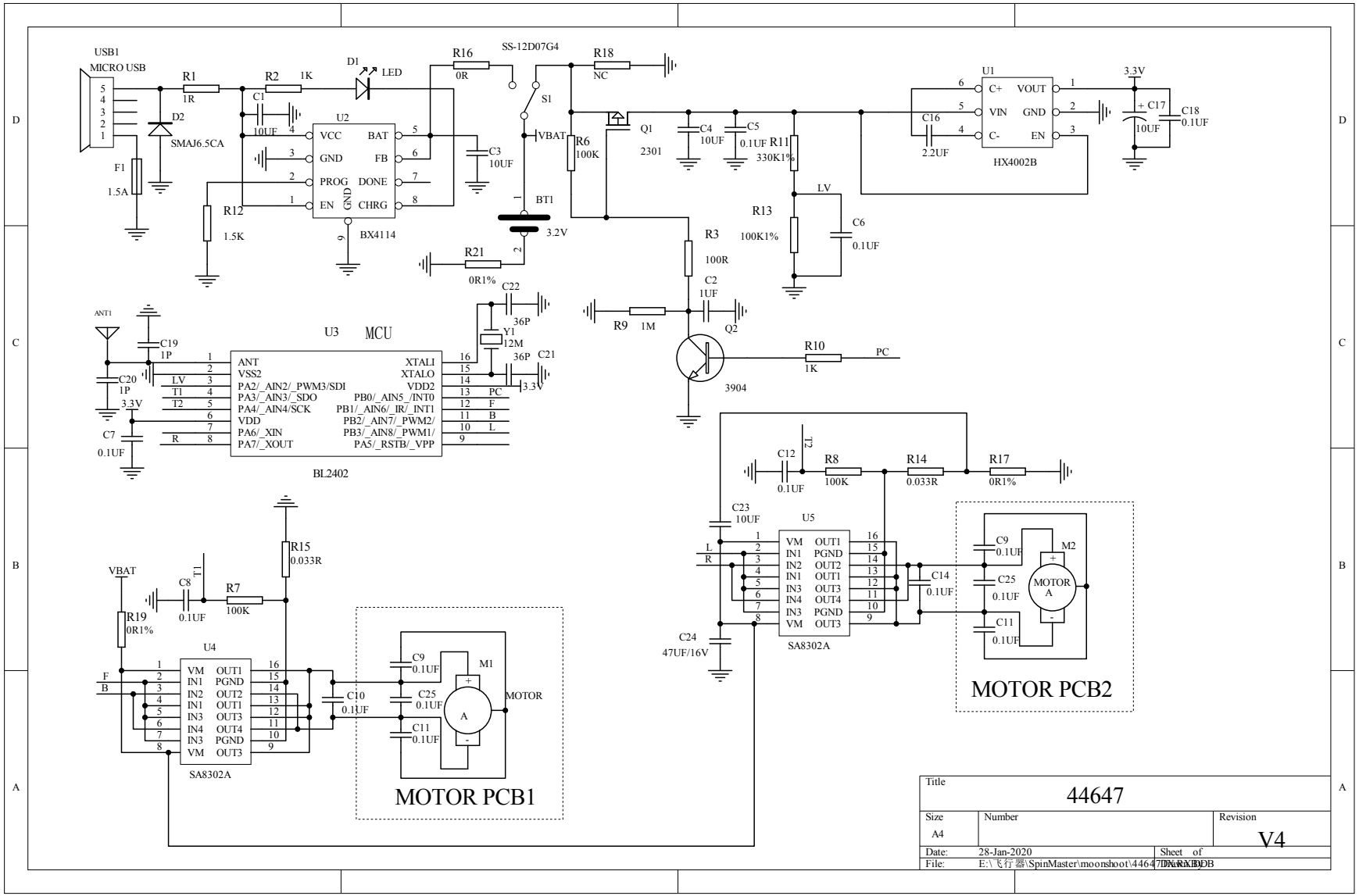

Title	44647	
Size A4	Number	Revision V4
Date: 28-Jan-2020	Sheet of	
File: E:\飞行器\SpinMaster\moonshoot\44647DxRxDB		