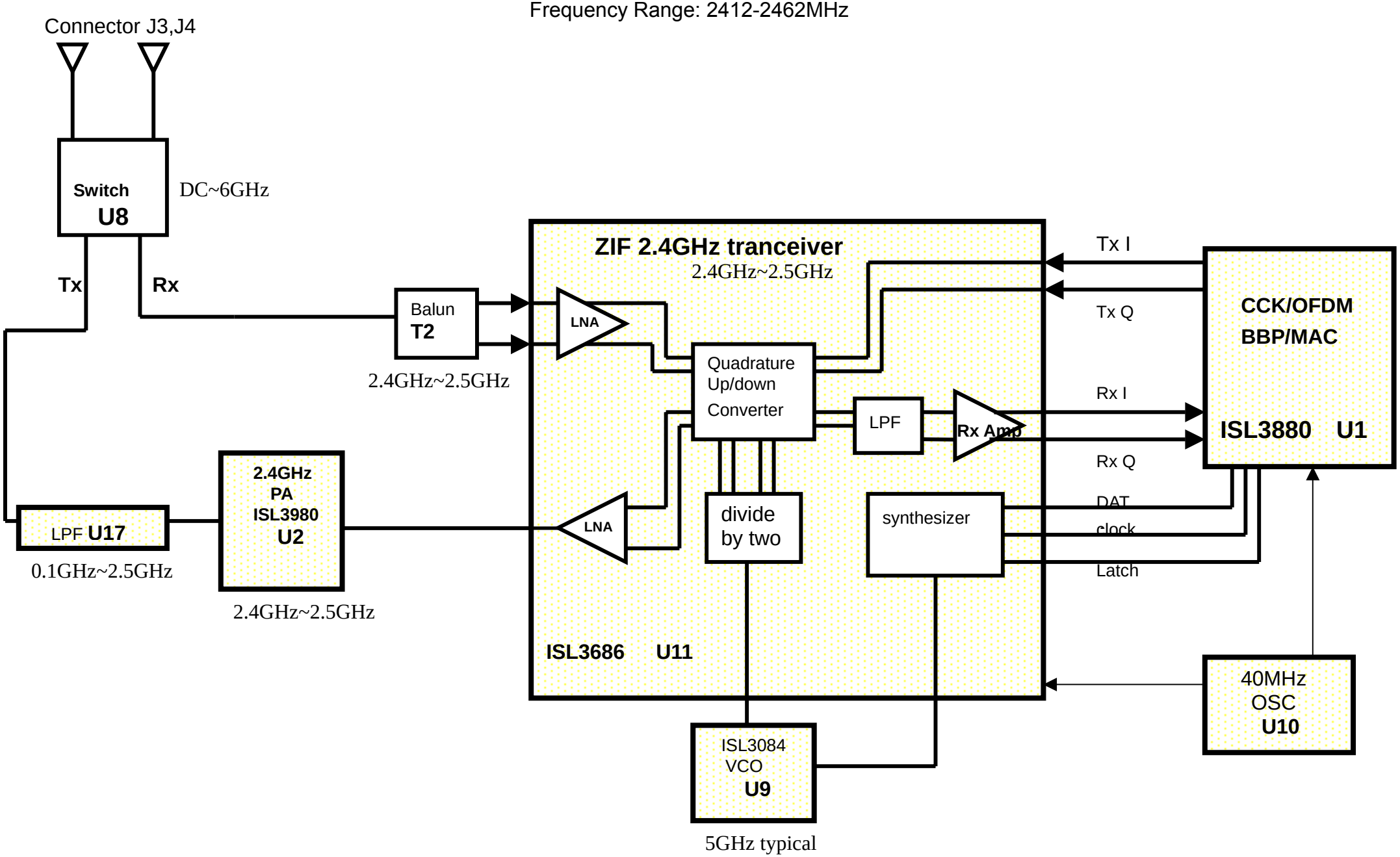Model Name: WL-850F□
Frequency Range: 2412-2462MHz