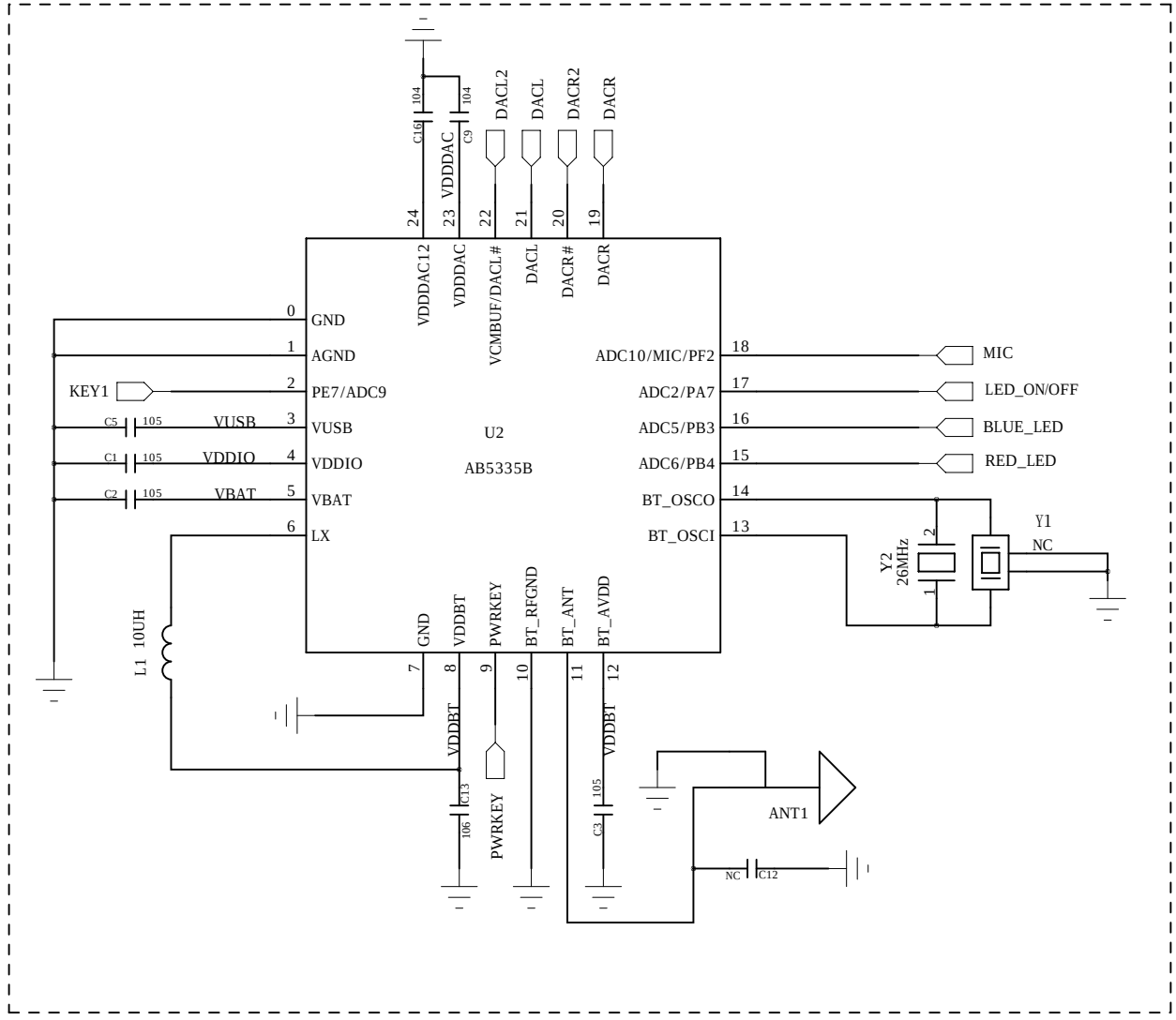
U2
AB5335B
GND
AGND
PE7/ADC9
VUSB
VDDIO
VBAT
LX
VDDDAC12
VDDDAC
VCMBUF/DACL#
DACL
DACR#
DACR
ADC10/MIC/PF2
ADC2/PA7
ADC5/PB3
ADC6/PB4
BT_OSCO
BT_OSCI
VDDBT
PWRKEY
BT_RFGND
BT_ANT
BT_AVDD
KEY1
MIC
LED_ON/OFF
BLUE_LED
RED_LED
L1 10UH
Y2 26MHz
Y1 NC
ANT1
C16 104
C9 104
C5 105
C1 105
C2 105
C13 106
C3 105
C12 NC
DACL2

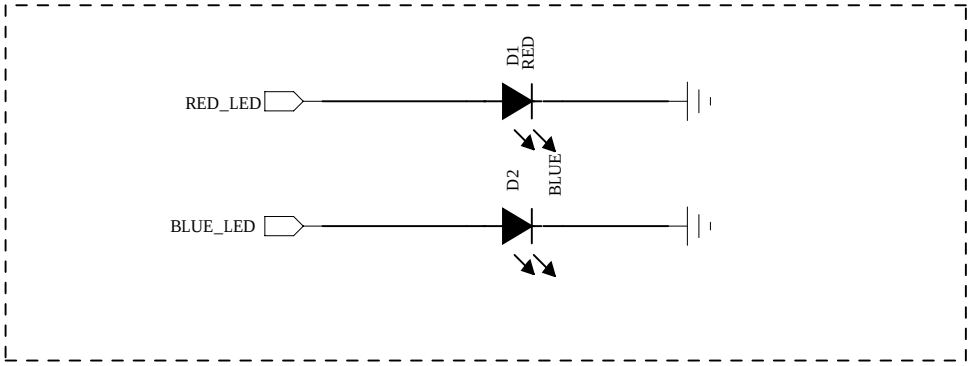
RED_LED
BLUE_LED
D1 RED
D2 BLUE

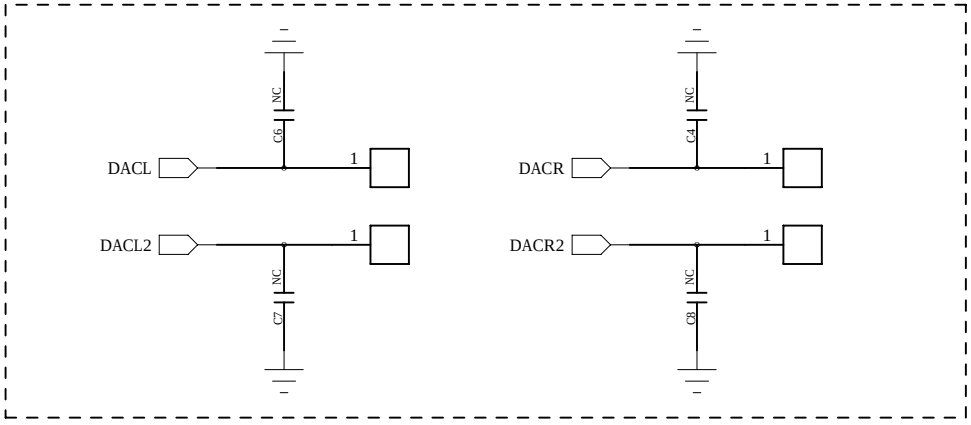
DACL
DACL2
DACR
DACR2
C6 NC
C7 NC
C4 NC
C8 NC

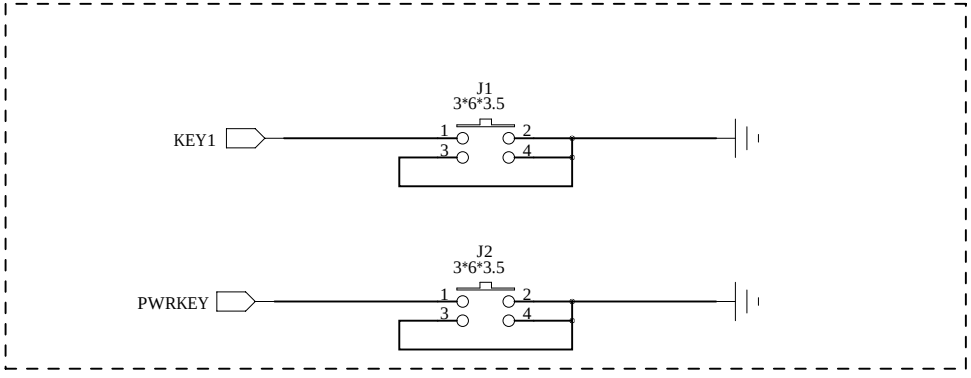
KEY1
PWRKEY
J1 3*6*3.5
J2 3*6*3.5

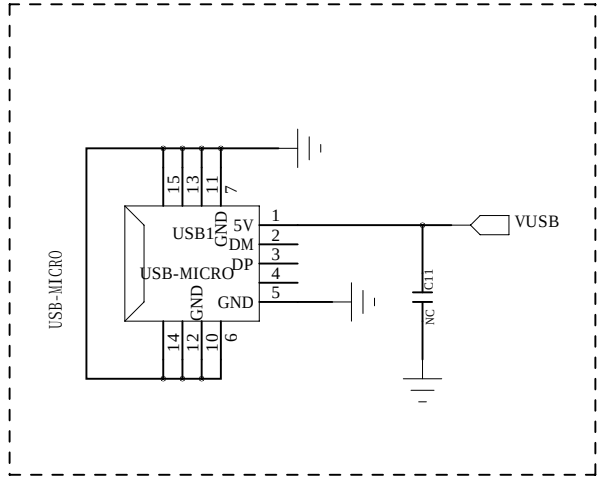
USB-MICRO
USB1
5V
DM
DP
GND
VUSB
C11 NC

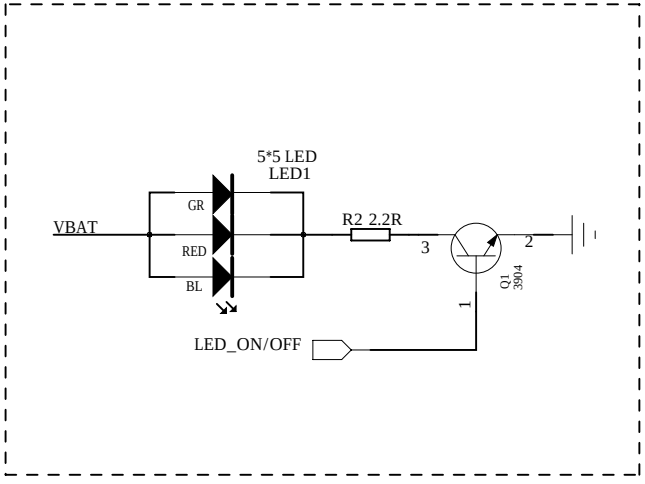
5*5 LED
LED1
GR
RED
BL
VBAT
R2 2.2R
Q1 3904
LED_ON/OFF

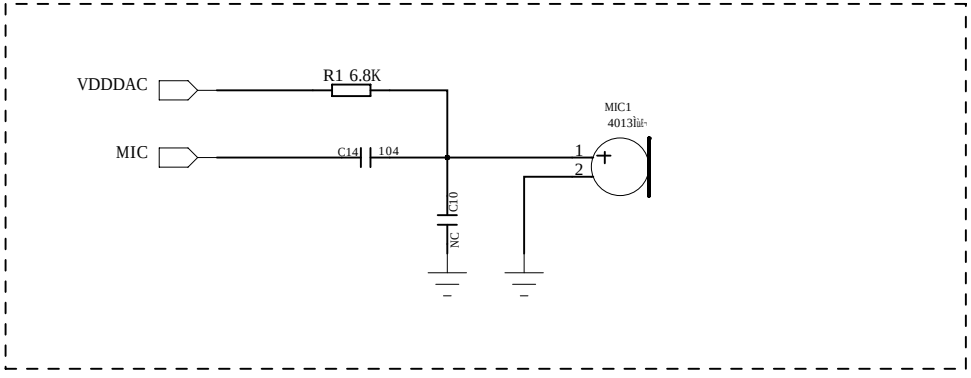
VDDDAC
MIC
R1 6.8K
C14 104
C10 NC
MIC1