REF-DES	P/N	DESCRIPTION	QTY
B1-2	32D0134-2	HOLDER/ +CONTACT, COIN CELL	2
ITEM 3	10A0020	BATTERY, 3V COIN CELL	2
C1	30B0445-081	CAPACITOR, LYTIC 22uF 10V	1
C13	SEE NOTE 1	CAP SMD0805 1.8pF +/-.1 NPO	1
C14	30B0477	CAPACITOR, LYTIC 4.7uF 16V	1
C2	30B0431	CAPACITOR, VARIABLE TOP ADJ	1
C3 C6 C10-12	030D710422R0	CAP SMD0805 0.01uF 20% X7R	5
C4 C7	030D71020100	CAP SMD0805 100pF 5% NPO	2
C5	030D76800000	CAP SMD0805 6.8pF 5% NPO	1
C8	030D73903000	CAP SMD0805 3.9pF +/-.1 NPO	1
CR1	33B0039-3	RESONATOR, CERAMIC 4MHz	1
D1 D5	52B0065	DIODE, SMD SIGNAL	2
D2	52B0070	DIODE, SMD DUAL COMMON CATHODE	1
D3	52B0115	DIODE, SMD ZENER 9.1V	1
D4	52B0114	DIODE, LED SMD805 YELLOW	1
JMP1	SEE NOTE 1	WIRE JUMPER SPECIAL 0.30" 1"	
L1	40A0096	INDUCTOR, 1000uH	1
ITEM 2	14D0628	PC BOARD	1
NEGDOWN1-2	32C0133	CONTACT, NEG COIN CELL	2
Q1-2	207C0069	TRANSISTOR, SMD PNP SWITCH	2
Q3 Q5	207C0073	TRANSISTOR, SMD NPN SWITCH	2
Q4	207C0074	TRANSISTOR, SMD NPN RF	1
R1	311C1225	RES SMD0805 1.2K 5%	1
R11 R13 R20 R28	311C1025	RES SMD0805 1.0K 5%	4
R19 R21	311C1045	RES SMD0805 100K 5%	2
R2 R10 R12	311C1535	RES SMD0805 15K 5%	3
R22	311C8235	RES SMD0805 82K 5%	1
R23	311C6825	RES SMD0805 6.8K 5%	1
R29-30	311C1015	RES SMD0805 100 5%	2
R3-6 R16-17 R26 R31	311C1035	RES SMD0805 10K 5%	8
R7-8 R14-15 R18 R24-25 R27	311C2235	RES SMD0805 22K 5%	8
R9	311C6235	RES SMD0805 62K 5%	1
SW1 SW4	180B0120-2	SWITCH, MOMENTARY PB	2
SW3 SW2	SEE CHART	SWITCH, MOMENTARY PB	2
U1	125C0148	SOIC, ELECT. ERASABLE PROM 3V	1
U2	SEE NOTE 1	SOIC, LEARNING TX ENCODER	1

NOTE 1

	001A5581-2 2 CHANNEL (LEARNING CHANNEL FIXED)	001A5581-4 4 CHANNEL (LEARNING CHANNEL FIXED)	001A5581-3 2 CHANNEL (LEARNING CHANNEL ROLL)	001A5581-5 4 CHANNEL (LEARNING CHANNEL ROLL)
SW2, SW3	NOT USED	180B0120-2	NOT USED	180B0120-2
U2	125C0154	125C0154	125C0267	125C0267
TEST SPE	190A0465	190A0465	190A0595	190A0595
C13	NOT USED	NOT USED	NOT USED	NOT USED
JMP1	NOT USED	NOT USED	NOT USED	NOT USED

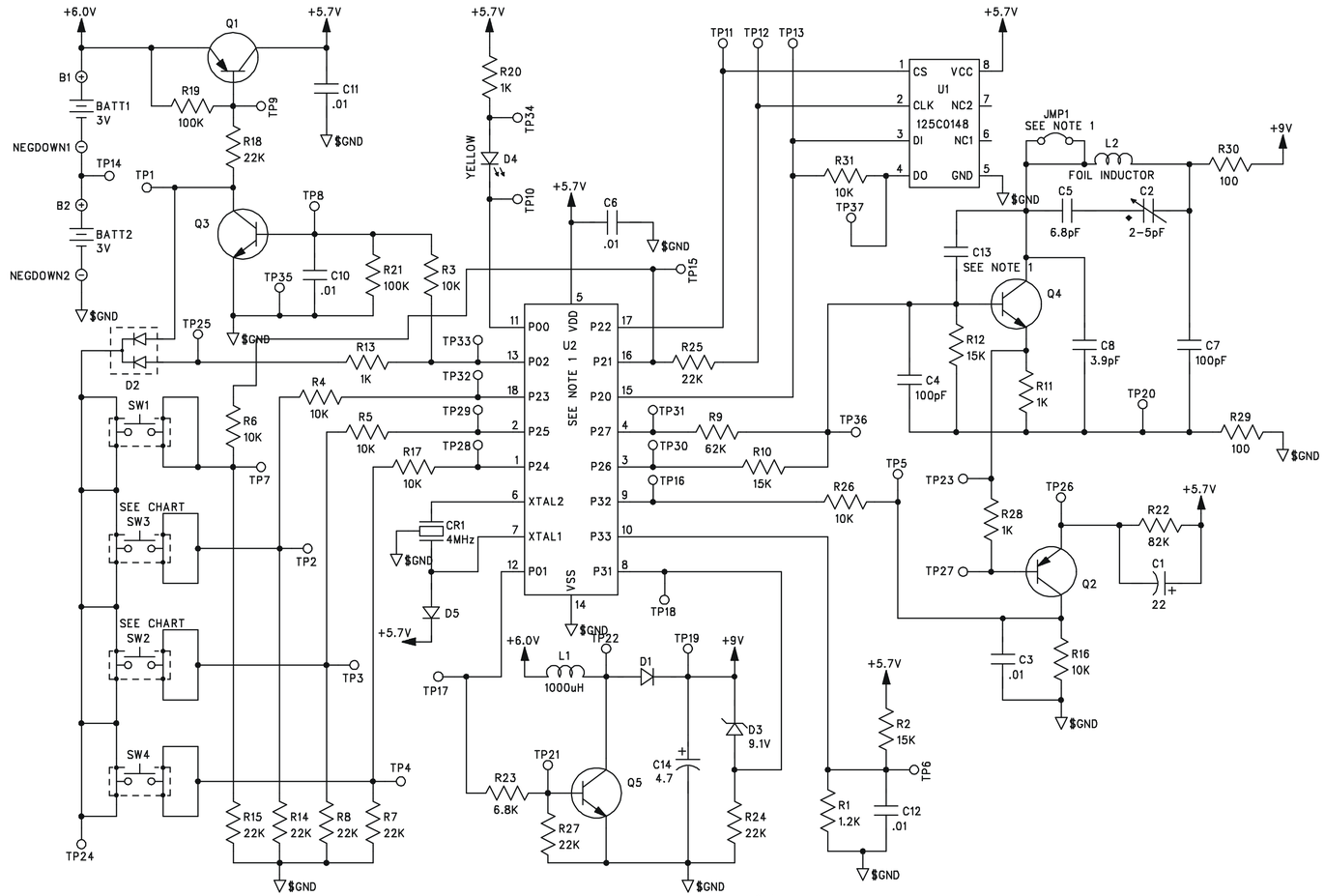

2. UNLESS OTHERWISE NOTED: CAPACITORS ARE IN MICROFARADS RESISTOR ARE IN OHMS.
3. TRANSMITTER ASSEMBLY NUMBERS: 001A5059 (BILLION CODE), 001A5467 (ROLLING CODE).
4. ALL LEADED COMPONENTS TO BE INSERTED TO WITHIN .020" OF BODY OR PREFORM LIMITS.
5. TEST SPEC REFERENCE: SEE CHART
6. ALL FLUX USED IN SOLDER PROCESS MUST BE HALIDE-FREE.
7. LEAD CLIPPING SPEC (WIRE LEADED PARTS ONLY): .050" MIN, .095" MAX.
8. CLEANING OF ASSEMBLY WITH A CLEANING SOLVENT AFTER SOLDERING IS NOT PERMITTED.
9. ALL ARRAY TABS MUST BE CUT FLUSH TO EDGE OF PCB, BUT NO MORE THAN .005 INTO BOARD.

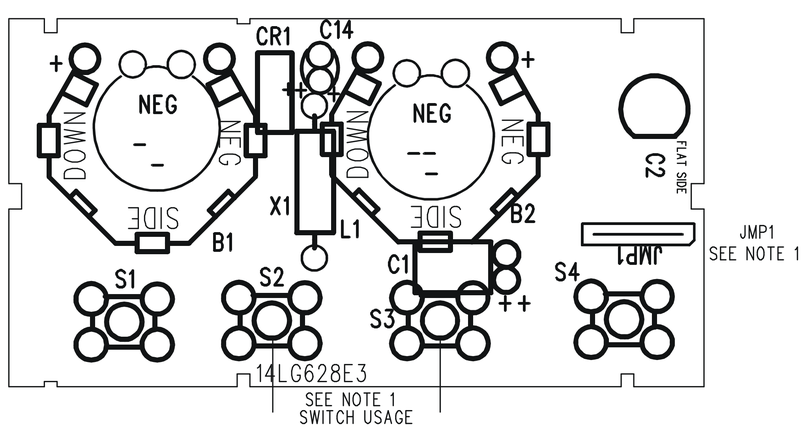

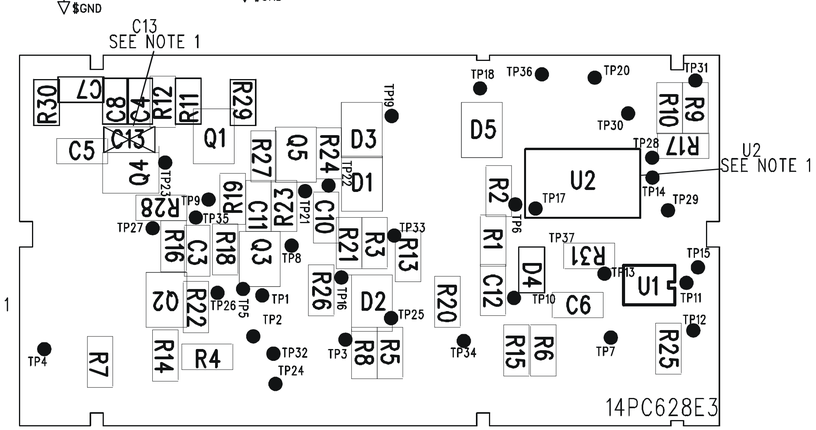

PART NUMBER				195D1620	E3
ECN/DATE	BY	APP	REVISION		REV

CHAMBERLAIN CONSUMER PRODUCTS GROUP
A UNIT OF DUCHOSSOIS INDUSTRIES, INC.

NAME: PCB Assy., 2/4 CH. 315MHz

MATERIAL

CONFIDENTIAL
THIS DRAWING AND/OR THE INFORMATION CONTAINED HEREIN IS AND REMAINS THE SOLE PROPERTY OF, AND IS PROPRIETARY TO, THE CHAMBERLAIN GROUP, INC. (CHAMBERLAIN). THIS DRAWING AND/OR INFORMATION SHALL BE KEPT CONFIDENTIAL AND MAY NOT BE REPRODUCED, COPIED, MODIFIED, DISCLOSED, TRANSFERRED, OR MADE AVAILABLE TO OTHERS, EXCEPT WITH THE WRITTEN CONSENT OF CHAMBERLAIN. THIS DRAWING AND/OR ALL COPIES, IF ANY, ARE SUBJECT TO RETURN TO CHAMBERLAIN.

THIS IS A COMPUTER GENERATED DRAWING

DO NOT CHANGE THIS DOCUMENT WITHOUT UPDATING THE COMPUTER DATA BASE

DO NOT SCALE DRAWING

TOLERENCE UNLESS OTHERWISE SPECIFIED
±.010 .00 DECIMAL
±.005 .000 DECIMAL
±1/64 ON FRACTIONS
±30" ON ANGLES
±.003 ON HOLES

FINISH

THIS COPY ISSUED:

	BY	DATE
DRAWN	DV	06/10/97
CHECKED	HOG	06/10/97
APPROVED		

SCALE	PART NUMBER	REV
	195D1620	E3