ISSUE	REVISION	DATE:	MADE BY	APPROVED BY
1.0	Change RC IC from UE6005 to UE6010	JUN/16/05	LI JING	XB LIU

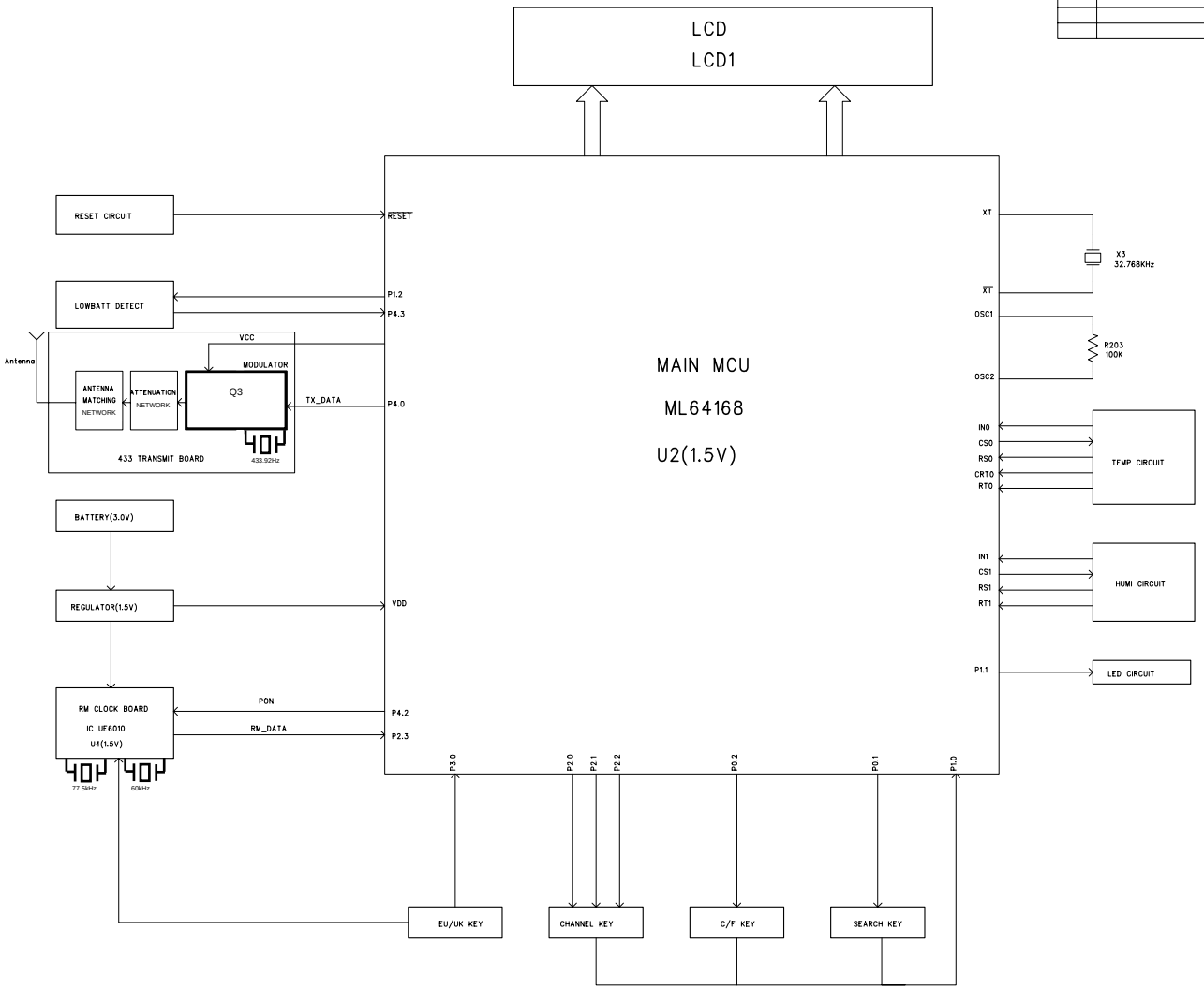

TITLE:	BLOCK DIAGRAM		
DOC NO.		DIVISION	LCD
MODEL NO.	RTGR328N	DRAWN	LI JING
CAD REF.	RTGR328N-BLK.SCH	CHKD	XB LIU
PAGE	1 OF 1	APPD.	WILSON CHAN
	IDT TECHNOLOGY LTD.		