NOTES: (UNLESS OTHERWISE SPECIFIED)

1. SECURE THE TRANSMITTER PCB ASSEMBLY (ITEM 1) TO THE SMOKE DETECTOR PCB (PART OF ITEM 2), BY INSERTING THE FOUR PIN HEADER ON THE SMOKE DETECTOR PCB INTO J1 OF ITEM 1. FIT THE END OF THE TRANSMITTER PCB INTO THE SLOTTED POST IN THE DETECTOR BASE (PART OF ITEM 2) AS SHOWN.
2. SECURE THE BASE AND THE TOP COVER WITH THE TWO SCREWS (ALL PARTS OF ITEM 2).
3. AFTER TEST IS COMPLETE, PRESS THE YELLOW PROTECTIVE COVER ONTO THE TOP OF THE DETECTOR (PART OF ITEM 2).

REVISIONS			
REV	DESCRIPTION	DATE	APPROVED
X1	INITIAL RELEASE		

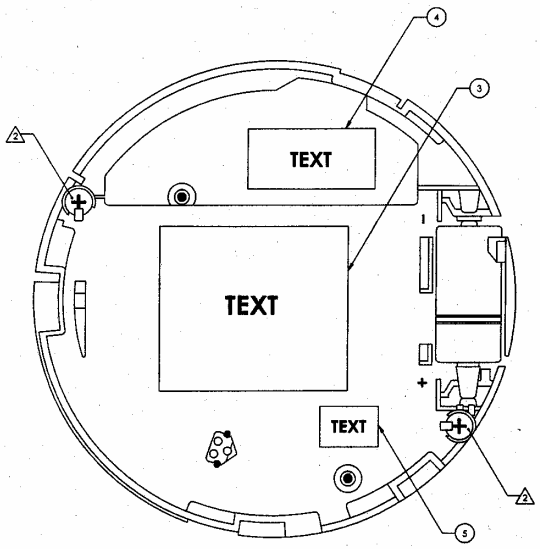

VIEW A-A
SOME PARTS OMITTED FOR CLARITY

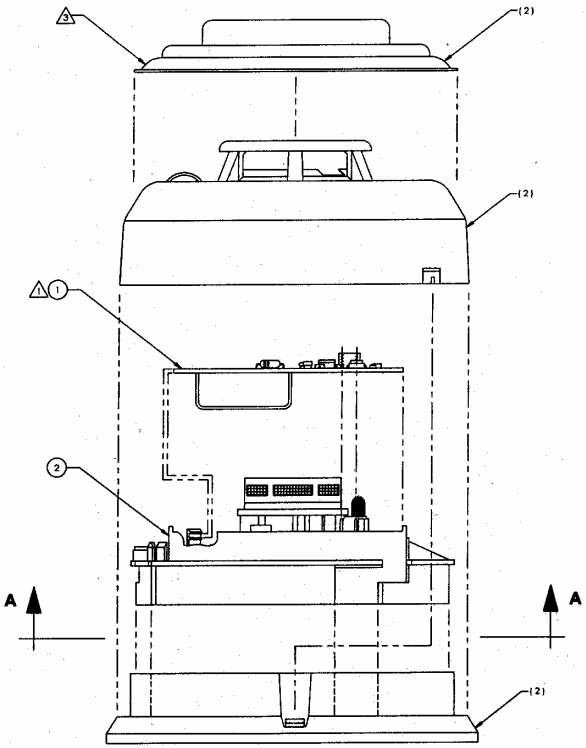

SEE SEPARATE PARTS LIST

UNLESS OTHERWISE NOTED ALL DIMENSIONS ARE INCHES [MM]
TOLERANCES:
DECIMALS: .XX±.01 [.3]; .XXX±.005 [.13]
ANGLES: ±0.5°
ROUGHNESS: ±.005 [.13]
FLATNESS: ±.005 [.13]
CONCENTRICITY: ±.005 [.13]

MATERIAL:
FINISH:
DO NOT SCALE DRAWING

PROJECT:
CAD DWG MODEL: V. JARA — DATE: 7/16/2006
CHECKED — DATE
APPROVED — DATE
APPROVED — DATE
APPROVED — DATE
APPROVED — DATE

Linear.

TITLE: ASSY, MECH, DXS/DXT-73

SIZE: D
DRAWING NO.: 225910
REV: X1
SCALE: NONE
SHEET 1 OF 1