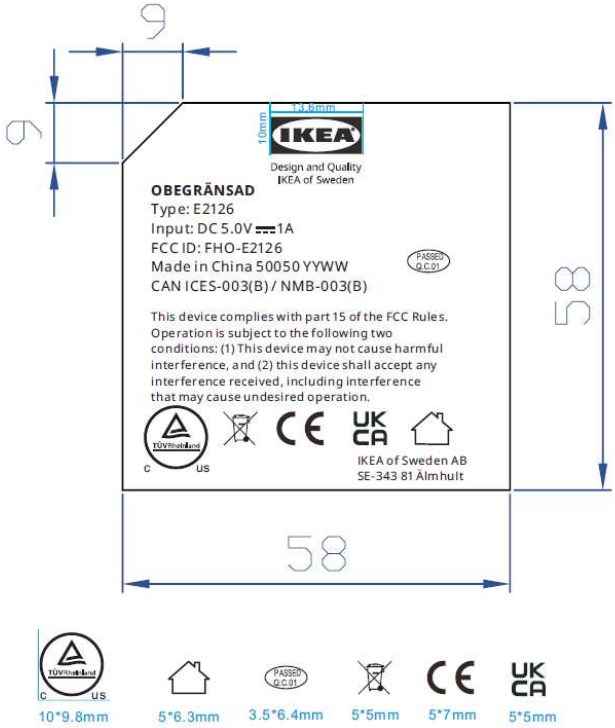

Label artwork

Label location on the bottom of product