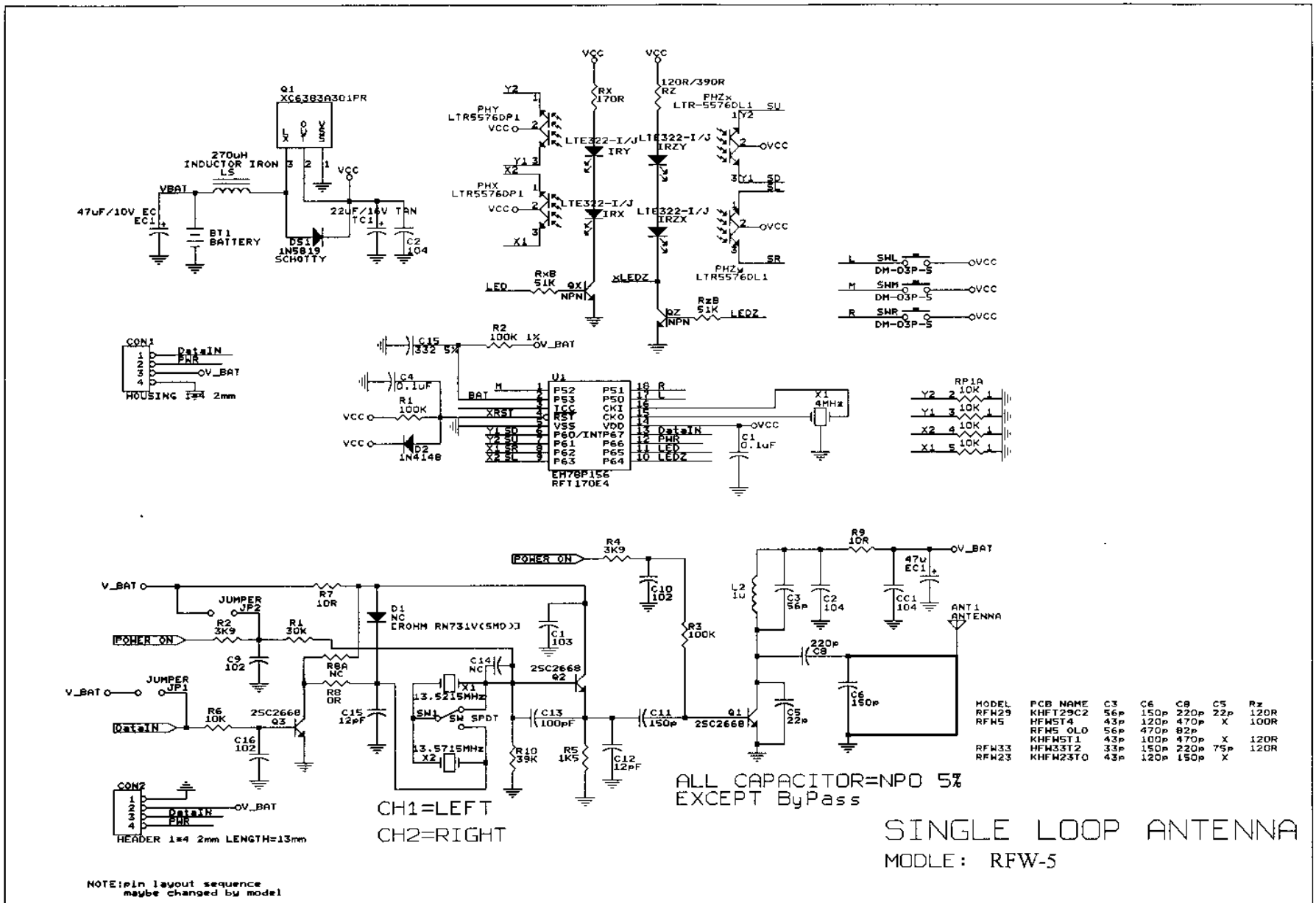


| MODEL | PCB NAME | C3 | C6 | C8 | C5 | Rz |
|---|---|---|---|---|---|---|
| RFW29 | KHFT29C2 | 56p | 150p | 220p | 22p | 120R |
| RFW5 | HFW5T4 | 43p | 120p | 470p | X | 100R |
| | RFW5 OLD | 56p | 470p | 82p | | |
| | KHFW5T1 | 43p | 100p | 470p | X | 120R |
| RFW33 | HFW33T2 | 33p | 150p | 220p | 75p | 120R |
| RFW23 | KHFW23TO | 43p | 120p | 150p | X | |