GWMT TRANSMITTER USER'S MANUAL

Manual Part No. MN002402
Rev. B
Issued 12/2001

Manual Assembly Instructions

Print this manual (double sided pages) on 20 lb. bond paper

Punch holes in printed pages for use in a three ring binder

Discard this sheet

GWMT TRANSMITTER USER'S MANUAL

Manual Part No. MN002402
Rev. B
Issued 12/2001

COPYRIGHT

Copyright © 2001 Allen Telecom Inc. All rights reserved.

All rights reserved. This document, and the Allen Telecom software to which it refers, are protected by copyright. Both this document and the Allen Telecom software are furnished under license as provided in such software and may be used only in accordance with that license. No part of this document or the Allen Telecom software may be reproduced, stored in a retrieval system, or transmitted, in any form or by any means, except as expressly provided in the license or with the prior written permission of Allen Telecom.

Grayson Wireless
140 Vista Centre Drive
Forest, VA 24551
www.grayson.com
800-800-7465

TRADEMARKS

Invex3G™, Inspector 32 Suite®, Illuminator™, Fleet Illuminator™, Interpreter™, Surveyor®, SpectrumTracker®, Cellscope®, and PageTracker® are trademarks of Allen Telecom.
Other product names mentioned herein may be the trademarks of their respective owners.
Manual Part Number MN 002402-A Issued 9/2001

TABLE OF CONTENTS

PREFACE ____ v

Certification ____ v
Warranty ____ v
In Case of Trouble ____ v

Chapter 1: Introduction ____ 1

About This Manual ____ 1
Contacting Grayson Wireless ____ 1
Corporate Headquarters ____ 1
Technical Support ____ 1
Sales ____ 2
About the Measurement System Product ____ 2
Measurement System Operational Overview ____ 2
CE and FCC Compliance ____ 2
RF Exposure ____ 3

Chapter 2: Preparation for Use ____ 5

Introduction ____ 5
Precautions ____ 5
Shock Hazard ____ 5
Equipment Modification ____ 5
Static Sensitive Components ____ 5
Unpacking and Inspecting ____ 5
PARTS LIST ____ 5

Chapter 3: Interface Description ____ 7

Introduction ____ 7
Front Panel Features ____ 7
Keypad Operation ____ 7
Display LCD ____ 8
Power Switches and AC Fuse ____ 8
Side Panel Features ____ 8

Chapter 4: Installation and Operation ____ 9

Installation Procedure ____ 9
Operation ____ 9
Power Source ____ 9
Battery Operation ____ 9
Antenna Connection ____ 9
Frequency Control ____ 9
Amplitude Control ____ 10
Modulation Control ____ 10
Transmit control ____ 10
Display Control ____ 11
Error Codes ____ 11

Chapter 5: Performance Specifications 13

General 13
Outside Dimensions and Weight 13
Input Power 13
Device Control LCD Display and Keyboard 13
RF Connection 13
Temperature Range 13
Over Temperature Protection (No Damage) 13
RF General 13
Signal Type 13
Output Power Maximum 13
Output Power Adjustment Range 13
Output Power Accuracy Absolute 13
Output Power Flatness over Temperature and Frequency 14
Output Impedance 14
Output VSWR 14
Frequency Stability 14
RF Load Protection 14
Output Harmonics and Spurious Emissions 14
GWMT 0920 14
Frequency Range 14
Frequency Tuning Step Minimum 14
GWMT 1820 14
Frequency Range 14
Frequency Tuning Step Minimum 14
GWMT 0820 14
Frequency Range 14
Frequency Tuning Step Minimum 14
GWMT 1920 15
Frequency Range 15
Frequency Tuning Step Minimum 15
GWMT 2120 15
Frequency Range 15
Frequency Tuning Step Minimum 15

Chapter 6: Brief Technical Description 17

Introduction 17
Overview 17

PREFACE

Certification

Grayson Wireless (hereinafter called “GW”) certifies that this product met its published specification at time of shipment from the factory.

Warranty

GW warrants to the original purchaser (hereinafter called “Buyer”) that Equipment manufactured by GW shall be free, under normal use and service, from defects in material and workmanship for a period of twelve (12) months from the date of delivery to the Buyer (the Warranty Period), and shall conform to GW’s specifications. With respect to any equipment not manufactured by GW (except for integral parts of GW’s Equipment to which the warranties set forth above shall apply), GW gives no warranty, and only the warranty, if any, given by the manufacturer shall apply. Warranty is available upon request.

The preceding paragraph sets forth the exclusive remedies for claims (except as to title) based upon defects in or nonconformity of Equipment manufactured by GW, whether the claim is in contract, warrant, tort (including negligence), strict liability or otherwise, and however instituted. Upon the expiration of the warranty period, all such liability shall terminate. The foregoing warranties are exclusive and in lieu of all other warranties, whether oral, written, expressed, implied or statutory. NO IMPLIED OR STATUTORY WARRANTIES OF MERCHANT ABILITY OR FITNESS FOR PARTICULAR PURPOSE SHALL APPLY. IN NO EVENT SHALL THE SELLER BE LIABLE FOR ANY INCIDENTAL, CONSEQUENTIAL, SPECIAL, INDIRECT OR EXEMPLARY DAMAGES.

DISCLAIMER

This manual has been developed by Grayson Wireless, a division of Allen Telecom Inc. and is intended for the use of its customers and customer support personnel. The information in this manual is subject to change without notice. While every effort has been made to eliminate errors, Grayson Wireless disclaims liability for any difficulties arising from the interpretation of the information contained herein. The information contained herein does not claim to cover all details or variations in equipment nor to provide for every possible incident to be met in connection with installation, operation, or maintenance. Should further information be desired, or should particular problems arise which are not covered sufficiently for the purchaser’s purposes, contact Grayson Wireless, 140 Vista Centre Drive, Forest VA 24551.

In Case of Trouble

Should further information be desired, or should particular problems arise which are not covered sufficiently for the purchaser’s purposes, contact Grayson Wireless, 140 Vista Centre Drive, Forest VA 24551 (800-800-7465).

Chapter 1: Introduction

About This Manual

This manual provides an overview of the GWMT Transmitter family. These transmitters are the propagation test configuration partners for the Invex3G data collection platform receivers.

Also included in this manual are procedures for unpacking, inspecting, and setting up the product for operation.

Contacting Grayson Wireless

Grayson Wireless is a worldwide leader in test and measurement products for the wireless industry. Please contact us for your wireless test and measurement requirements and questions.

Corporate Headquarters

Address:	Grayson Wireless, Inc. 140 Vista Centre Drive Forest, VA 24551-3965 USA
Telephone:	(434) 386 - 5300
Toll Free:	(800) 800 - 7465
Fax:	(434) 386 - 5324
World Wide Web:	www.grayson.com
Office Hours:	Monday to Friday 8:00 AM to 5:00 PM Eastern Standard Time

Technical Support

Telephone:	(434) 386 - 5330
Toll Free:	(800) 800 – 7465
World Wide Web:	www.grayson.com
E-mail:	support@grayson.com
Technical Support Hours:	Monday to Friday 8:00 AM to 8:00 PM Eastern Standard Time

When contacting technical support via phone or e-mail, please provide the following information.

- Transmitter serial number
- Your name, company name, and telephone number
- Complete description of the question or problem
- Exact wording of any error messages that appear

Sales

The Grayson Wireless team of sales engineers can be reached Monday through Friday from 8:00 AM to 5:00 PM Eastern Standard Time. Please contact your sales representative for information about the complete line of Grayson Wireless measurement products.

United States

Telephone: (434) 386 – 5300

Fax: (434) 386 – 5324

Toll-free: (800) 800 – 7465

World Wide Web: www.grayson.com

E-mail: sales@grayson.com

Europe

Telephone: +44 (0) 1635-569-695

Fax: +44 (0) 1635-569-463

E-mail: europesales@grayson.com

About the Measurement System Product

Measurement System Operational Overview

The GWMT transmitters are full featured, 20-watt transmitters that can generate CW test signals in the specified frequency bands. The rugged GWMT transmitters are housed in durable cases, ideal for the rigors of portable use. The GWMT transmitters enable carriers to test signal propagation from potential base station locations, and to validate and refine analytical propagation models. Information measured with the Invex3G system in these site surveys assists in system budget analysis, site selection, and evaluation of system architecture prior to hardware installation. The GWMT transmitters are essential site survey tools for network design engineers. Their rugged design will support temporary installations required for system site surveys.

CE and FCC Compliance

The GWMT Transmitter has been tested for compliance to applicable emission and safety standards per the table below.

	Model Number				
	GWMT0920	GWMT1820	GWMT0820	GWMT1920	GWMT2120
EMC	EN 301-489-08	EN 301-489-08	CFR 47, Part 15, Subpart B: 1998, Class B	CFR 47, Part 15, Subpart B: 1998, Class B	EN 301-489-01
Wireless	EN 301 502	EN 301 502	CFR 47, Part 22, Part 90	CFR 47, Part 24	TS 125 141
Safety	EN60950:1992 including amendments 1,2,3,4 & 11	EN60950:1992 including amendments 1,2,3,4 & 11			EN60950:1992 including amendments 1,2,3,4 & 11

RF Exposure

IMPORTANT NOTE: To comply with FCC RF exposure compliance requirements, the following antenna installation and device operating configurations must be satisfied:

During normal use the antenna must be fixed-mounted on outdoor permanent structures with a separation distance of at least 6 meters from all persons and must not be co-located or operating in conjunction with any other antenna or transmitter.

The maximum allowed antenna gain is xx dBi.

For the 0820, the maximum allowable antenna gain is 19.24149 dBi.
For the 1920, the maximum allowable antenna gain is 21.9715 dBi.

Chapter 2: Preparation for Use

Introduction

This chapter outlines precautions and preparations necessary prior to use of the measurement system. Unpacking and inspection of the individual pieces, plus the requirements placed on the external power supply are also covered.

Precautions

Shock Hazard

When replacing the AC fuse on the front panel, be sure to unplug the line cord and replace it with a fuse of the correct rating and type.

When connecting the DC power cable, be sure to connect the red lead to the positive terminal and black lead to the negative terminal.

Equipment Modification

This equipment complies with Part 15 of the FCC Rules. Any changes or modifications not expressly approved by the manufacturer could void the user's authority to operate the equipment.

Static Sensitive Components

This unit includes integral static discharge protection devices. However, as with any electronic equipment, care should be taken to not touch connector pins directly.

There are no user serviceable components inside. Units must be returned to the factory for repairs.

Unpacking and Inspecting

All equipment is packaged in a single shock and vibration protected enclosure.

Examine the carton for signs of damage. If carton appears to be damaged, contact the transportation agent immediately.

Open the carton and carefully remove each item. Check all items received against the packing slip and the following Parts List. Examine each item for physical damage, and make a note of any damages observed.

PARTS LIST

Item	P/N
AC Line Cord	G15A0518-1
DC Line Cord	G15A0519-1
AC Fuse	G52A0005-1 4 Amp
DC Fuse	G52AF013-30 30 Amp
Manual	A002544.G1
External Filter (GWMT 2120 only)	G69A0086-1
RF Cable (GWMT 2120 only)	G15A0552-1

Chapter 3: Interface Description

Introduction

This chapter covers the front panel features and external interface ports. The first section gives a pictorial view of the front panel and a detailed description of the keypad and resultant indicators. The second section gives a detailed description of the side panel connectors and fuse holder.

Front Panel Features

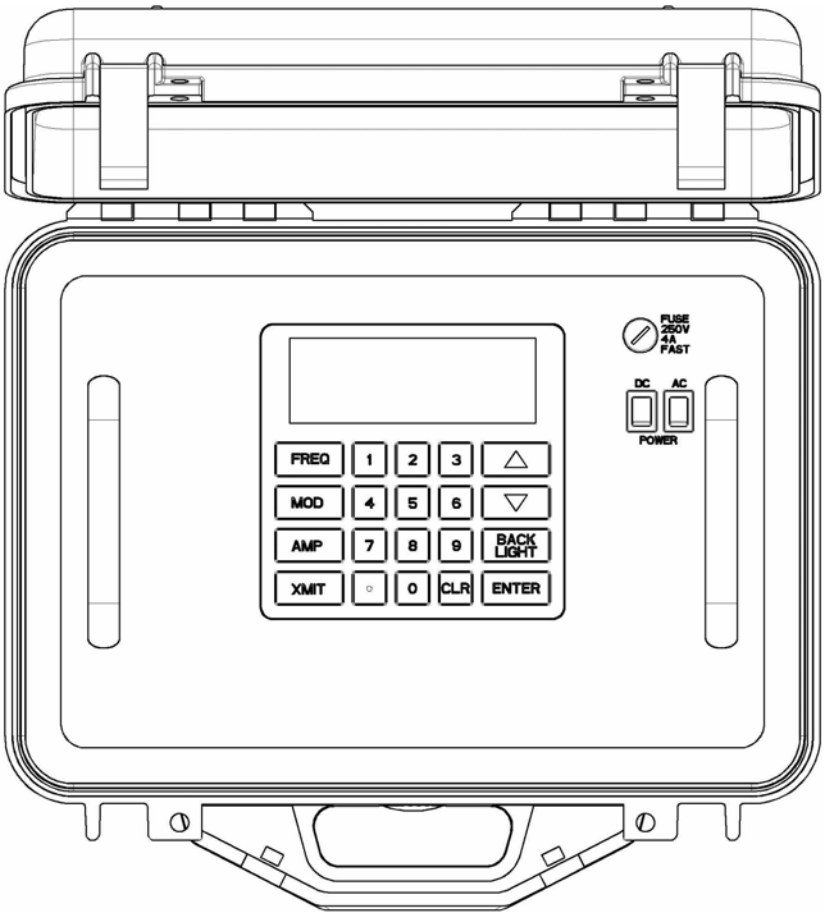

Keypad Operation

- **Mode Keys**

  FREQ: The FREQ key is used to place the transmitter into the Frequency Mode for setting the transmitter frequency.

  MOD: The MOD key is used to place the transmitter into the Modulation Mode (Not Implemented).

  AMP: The AMP key is used to place the transmitter into the Amplitude Mode for setting the amplitude of the transmitter.

  XMIT: The XMIT key is used to toggle the Transmit mode between on and off.

- **Numeric Keys**

  0-9, **decimal pt:** The numeric keys are used to directly enter frequency or amplitude values.

  CLR: The CLR key reloads the last valid frequency or amplitude entry.

- **Function Keys**

  ↑,↓: The Arrow keys are used for scrolling to select frequency or amplitude values, and to adjust the visibility of the LCD display in conjunction with the Enter key.

  BACKLIGHT: The Backlight key toggles the LCD display backlight between on and off.

  ENTER: The Enter Key is used to activate frequency and amplitude entries and to adjust the visibility of the LCD display in conjunction with the Arrow keys.

Display LCD

The Display LCD consists of 4 lines of 20 characters. Each line serves a different function, as described below:

- **Line 1: Frequency**: indicates the transmit frequency in MHz.
- **Line 2: Amplitude**: Indicates output power in 0.1dB increments
- **Line 3: Modulation**: Indicates on/off state of Modulation (not implemented) and the **Transmitter (RF On/Off)**
- **Line 4: Diagnostic**: Displays internal DC voltage and operating temperature of the transmitter in degrees C. Error messages are also displayed on this line when required.

Power Switches and AC Fuse

An AC power switch and a DC power switch are located on the upper right side of the front panel. When using an AC power source, both power switches must be in the "**on**" position for transmitter operation. When using a DC power source, the DC power switch must be in the "**on**" position for transmitter operation (the AC power switch can be in either position). The AC fuse holder is located directly above the DC power switch.

Side Panel Features

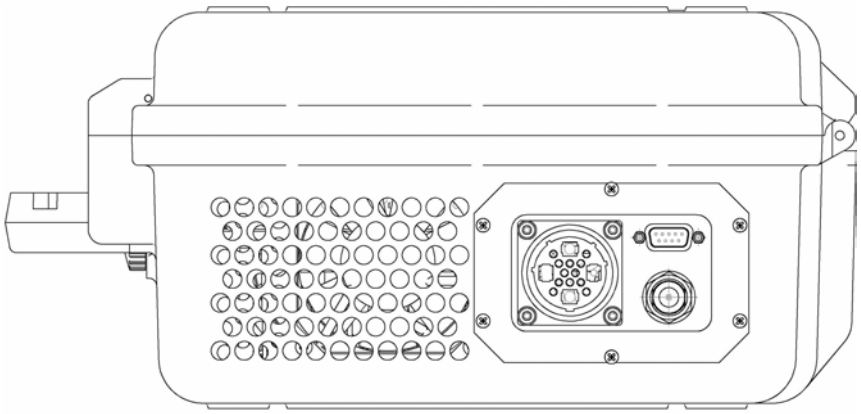

The **Power Connector** (AC or DC Power Cable) and the **RF Connector** (Type N Female) are located on the side panel. The DB-9 connector is used by Grayson Wireless for internal test purposes and has no user function.

Chapter 4: Installation and Operation

This chapter covers the installation, set up and operational features of the GWMT transmitter.

Installation Procedure

Remove the transmitter from the shipping container and install it in a location with an ambient temperature range between -20 and 55°C.

Operation

Power Source

Connect either the AC power cord to a source of 110/220 Vac 50/60 Hz or the DC power cable to 11-15 Vdc capable of 20 A. The AC input is fused on the front panel and the DC power cable contains an inline 30A fuse and reverse polarity protection. The front panel Power switch controls the primary power that is connected to the side panel.

Battery Operation

Connect the DC cable to the GWMT and either a 12 volt battery or a 12 volt power supply capable of 20 amps. An internal voltage monitoring circuit will disable the transmitter when the internal voltage drops to approximately 11 volts. The front panel will then display “LOW BATT.” To restore operation, recharge or replace the battery and then resume testing.

Note:	**Long cables or poor connections will create a voltage drop that will cause the transmitter to shut down prematurely.**

Antenna Connection

Connect the RF cable from the **RF Connector** (Type **N** Female) located on the side of the transmitter to an appropriate antenna.

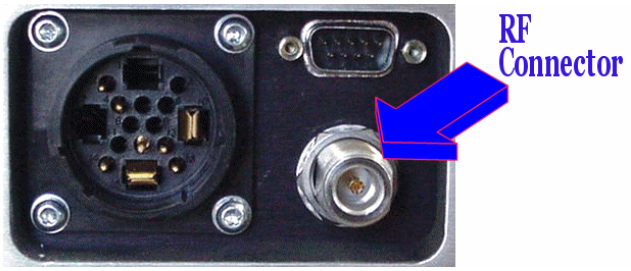

Note:	**For GWMT 2120 transmitters only, an external bandpass filter is required if the transmitter is collocated near RF sensitive equipment. The use of this filter and associated cables results in a loss of approximately 1 dBm in output power.**

Frequency Control

The desired frequency can be entered either directly using the numeric keys, or it can be scrolled to by using the up and down arrow keys. The keypad sequence is as follows:

Push the Frequency (**FREQ**) button. Notice that the flashing cursor moves to the left-most digit of the frequency value.

If entering the value directly, enter the value using the **numeric** keys, including the decimal point and fraction (KHz), followed by the **Enter** key. The display will automatically adjust your entry to the nearest valid frequency setting that is less than or equal to the value entered.

If scrolling, press the up or down **arrow** keys repeatedly until the desired value is obtained. The display will automatically increment (decrement) to the next (previous) valid frequency each time one of the keys is pressed.

Note:	**The entry of an out-of-band or invalid frequency value will result in the display returning to the previous valid entry.**

Valid Frequencies

The selection of valid frequencies is dependent on the frequency range and the minimum frequency tuning step for the specific transmitter. For example, the RF 1900 PCS transmitter can implement any frequency from 1850 to 1990 MHz provided that it is an integer multiple of either 30KHz or 50 KHz (the minimum frequency tuning step). If an invalid frequency such as 1860.02 MHz is entered, the frequency synthesizer will automatically adjust the entry to 1860.00 MHz which is the nearest valid frequency that is less than or equal to the value entered.

The value 1860.02 MHz is invalid since 1860.02 MHz divided by 50 KHz (1860020 / 50 = 37200.4) results in a value that is not an integer and 1860.02 MHz divided by 30 KHz (1860020 / 30 = 62000.666) also results in a value that is not an integer. The value 1860 MHz is valid since 1860 MHz divided by 50 KHz (1860000 / 50 = 3720) results in an integer. The nearest valid frequencies above 1860 MHz are 1860.03 MHz, which is an integer multiple of 30 KHz and 1860.05 MHz which is a multiple of 50 KHz. Refer to Chapter 5, Performance Specifications, for the valid frequency range and minimum frequency tuning step for specific transmitters.

Amplitude Control

The desired amplitude can be entered either directly using the **numeric** keys, or it can be scrolled to by using the up and down **arrow** keys. The keypad sequence is as follows:

- Push the **AMP** (amplitude) button. Notice that the flashing cursor moves to the left-most digit of the amplitude value.
- If entering the value directly, enter the desired amplitude from **13 to 43 dBm**, by using the **numeric** keys, including the decimal point and fraction, followed by the **Enter** key.
- If scrolling, press the up or down **arrow** keys repeatedly until the desired value is obtained. The display will automatically increment (decrement) by 0.1 dB each time one of the keys is pressed.

Note:	**The entry of an amplitude value that is below 13 dBm or above 43 dBm will result in the display returning to the previous valid entry.**

Modulation Control

Not currently implemented

Transmit control

The RF Transmitter toggles on and off with each pressing of the **Transmit** key. Prior to turning on the transmitter, the unit checks PA temperature and the Battery Voltage, and will not allow the transmitter to turn on if either is out of range. The unit also checks the Phase-locked Loop to ensure that the Synthesizer is locked, and will not allow the transmitter to turn on if it is not. After turning on the transmitter, the unit checks the level control to make sure the transmit level is within spec, and will turn off the transmitter if it is not. The RF entry on line 3 of the display is

continuously updated with the status of the transmitter; if the transmitter turns off due to an error condition, this will be displayed on line 4.

Display Control

There are two types of control for the LCD: Backlight ON/OFF, and Contrast Adjust. The **Backlight** key toggles the LCD backlight on and off.

If the LCD is hard to read due to poor contrast, adjust the contrast as follows:

- If the LCD characters are dim or not visible, hold the **Enter** key down and repeatedly press the **Down Arrow** key (↓) until the characters are dark enough.
- If the LCD characters and background are too dark, hold the **Enter** key down and repeatedly press the **Up Arrow** key (↑) until the background is light enough.

Error Codes

The unit provides several diagnostic messages to aid in debugging; consult your Grayson Wireless representative if error messages appear.

- **PLL not locked**: The synthesizer has lost phase lock.
- **Out of Range**: The value entered is out of range (either frequency or amplitude.)
- **Press FREQ or AMP first**: The user tried to use the up or down arrows keys without selecting Frequency (**FREQ**) or Amplitude (**AMP**) first.
- **ALC Out of Range**: Power amplifier is not under leveling loop control.
- **Low Battery**: The battery voltage is less than required (about 11 Volts)
- **RefDAC out of range**: The internal reference has failed.
- **Bad EEPROM Checksum**: EEPROM data is invalid.
- **Need to Calibrate**: The unit has not been properly calibrated.
- **PA Over-temperature**: The power amplifier is too hot (about 85 degrees C)

Chapter 5: Performance Specifications

General

Outside Dimensions and Weight

Height	6.54 inches
Width	16.1 inches
Depth	14.5 inches
Weight	< 30 lbs

Input Power

110/220 VAC 50-60 Hz (<300 W) or 11-15 VDC (20 A)

Device Control LCD Display and Keyboard

Frequency Select

Output Power Select, 0.1dB Increments

Transmit Key Select

Status: Key, DC Voltage, PA Temp

Error Messages

RF Connection

Type “N” Female

Temperature Range

-20° to + 55° C

Over Temperature Protection (No Damage)

Unit will self-disable if maximum temperature is exceeded.

RF General

Signal Type

CW

Output Power Maximum

20 Watts (+43 dBm)

Output Power Adjustment Range

+13 to +43 dBm, 0.1 dB Steps

Output Power Accuracy Absolute

$\pm$1 dB (20 to 43 dBm Output, 0° to $+40^{o}$ C)

Output Power Flatness over Temperature and Frequency

±1 dB (20 to 43 dBm Output, 0° to $+40^o$ C)

Output Impedance

50 ohms

Output VSWR

≤ 1.5:1

Frequency Stability

1 PPM

RF Load Protection

Key On Into Open/Short No Damage

Output Harmonics and Spurious Emissions

<-75 dBc @ 20 Watts output typical

GWMT 0920

Frequency Range

870-960 MHz

Frequency Tuning Step Minimum

50 kHz

GWMT 1820

Frequency Range

1710-1880 MHz

Frequency Tuning Step Minimum

50 kHz

GWMT 0820

Frequency Range

824 - 894 MHz (850-851 MHz excluded)

Frequency Tuning Step Minimum

30 kHz

GWMT 1920

Frequency Range

1850 - 1990 MHz

Frequency Tuning Step Minimum

30 / 50 kHz

GWMT 2120

Frequency Range

2110 - 2170 MHz

Frequency Tuning Step Minimum

50 kHz

Chapter 6: Brief Technical Description

Introduction

This chapter includes information on how the transmitter hardware functions. This information is presented so that the user may have a better understanding of how the unit works.

Note: There are no field repairable assemblies in the transmitter.

Overview

The GWMT is a self-contained transmitter for the specified frequency band. A block diagram is shown below.

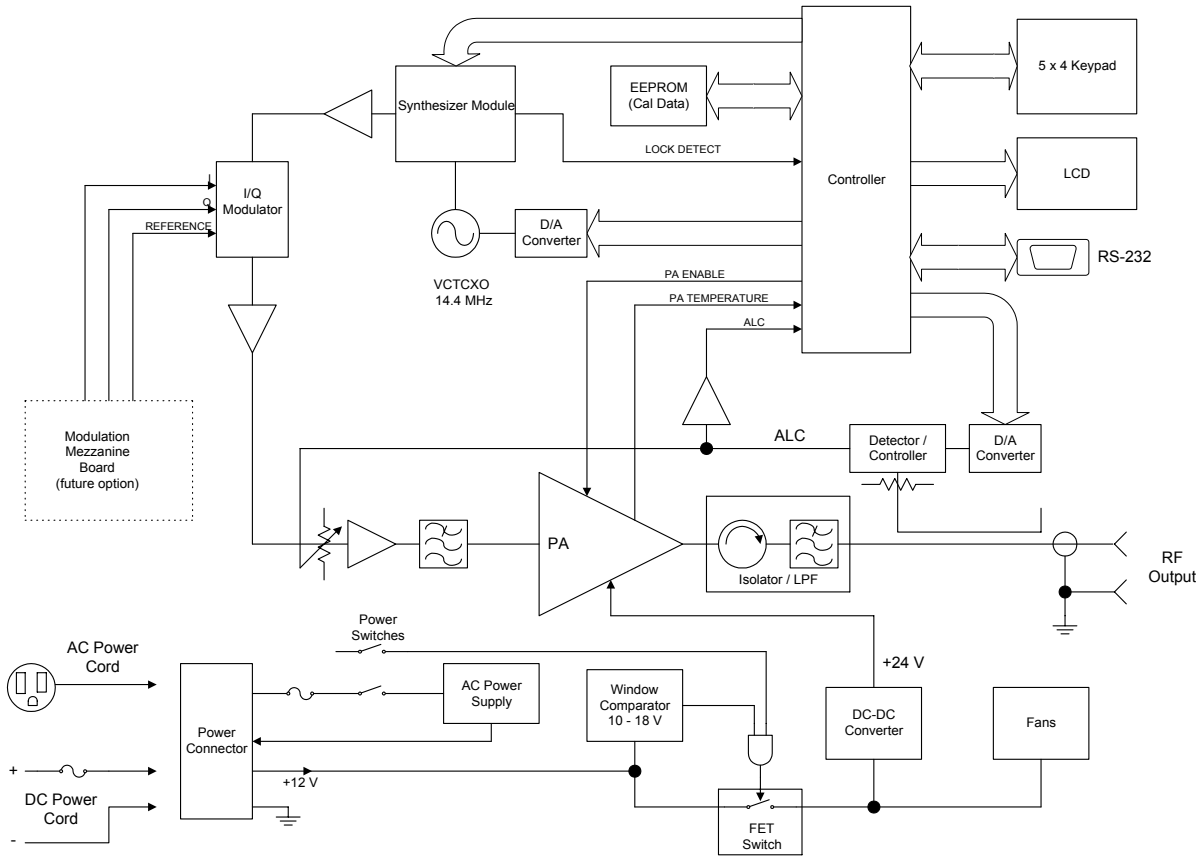

The RF signal is generated in the synthesizer module, which derives its reference from an on board TCXO. The synthesizer tunes in steps appropriate for the frequency band. Following the synthesizer is an I/Q modulator, included for future applications requiring modulation.

The modulator output is applied to a variable attenuator, and then to the power amplifier. A sample of the PA output is coupled to a level detector / controller IC, which also receives a set point voltage from a digital to analog converter. This IC develops an error voltage that is applied to the variable attenuator, forming an automatic level control loop. The level set point value is derived from values stored in EEPROM, which are determined at unit calibration.

The power amplifier is protected from high VSWR loads by an isolator at its output. The PA also provides a temperature sense signal to the controller, which disables transmission if temperature is excessive.

The transmitter is designed to operate from a nominal 12 VDC source. A DC-DC converter is included to convert the 12 V input to 24 V required for the PA. Circuitry senses the input DC voltage, and disables the transmitter if an under voltage or over voltage condition is detected. The transmitter also contains a universal input AC power supply. Its 12 VDC output is connected to the DC power input via a jumper in the AC power cable.

The transmitter is controlled by a PIC micro-controller. This accepts keypad input and outputs data to the synthesizer, digital to analog converters, and the front panel liquid crystal display. The micro-controller also monitors several diagnostic inputs, and disables transmission if an error is detected. An RS-232 interface is also provided, which is used during unit calibration.