版本	变更依据	变更内容	日 期	姓 名

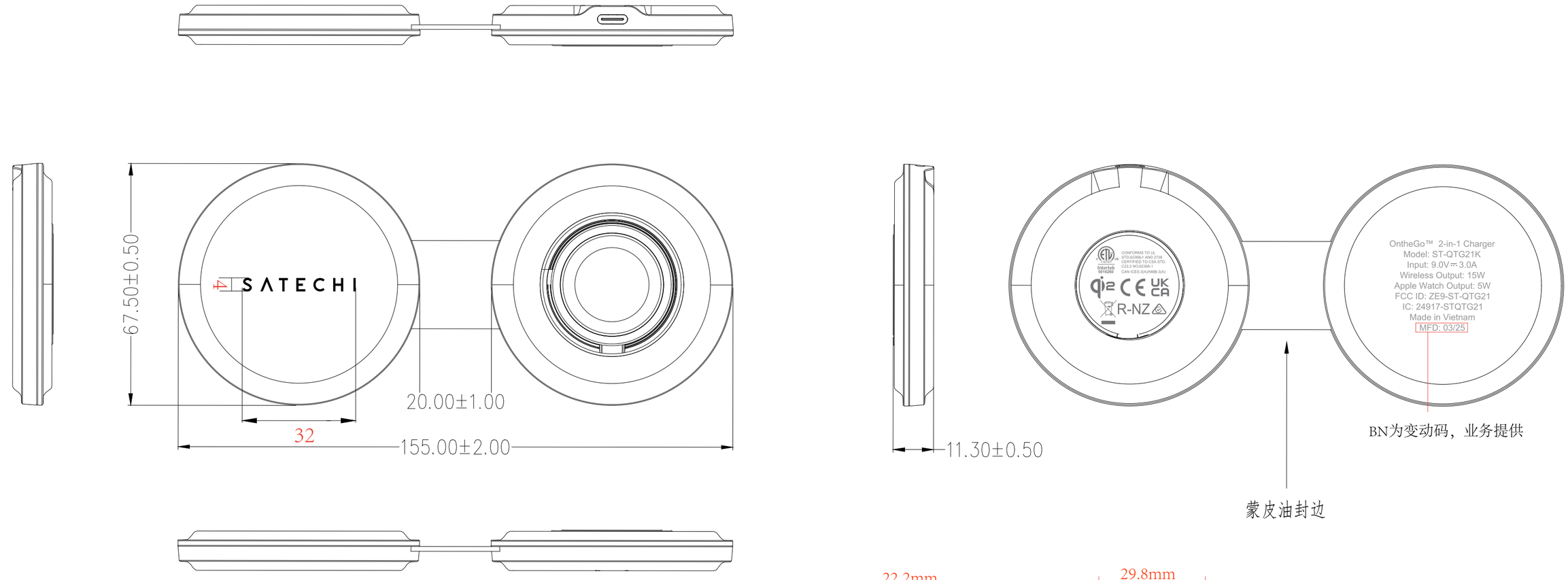

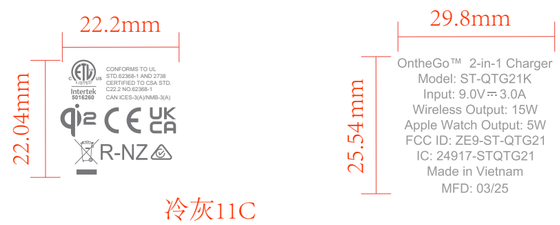

冷灰11C
P Cool Gray 11C

150.0~300.0	±0.20	±0.075	
100.0~150.0	±0.15	WALL THICKNESS	
50.0~100.0	±0.125		
25.00~50.00	±0.08	75~150.0	±0.10
0.0~25.0	±0.06	0.0~75.0	±0.075
DIMENSIONAL RANGE (mm)	TOLERANCE WITHOUT PARTING LINE	FLATNESS	
TOLERANCE CHART NF T 58000 PRECISION CLASS			

PRODUCT NAME:	HKWP11242-20 产品图
PART NO:	
DWG NO:	
APPD:	
CKD:	
DR:	20241121

HANK®

The testing report is issued by HANK Electronics Ltd, can't be copyed, re-vised or taken off office without permission

UNLESS OTHERWISE SPECIFIED				UNIT
Angle:1°	XX= ±0.20	XX.X=±0.10	XX.XX=±0.05	MM
	SCALE	SHEET	REV.	
	2:1	1/1	SV1.0	