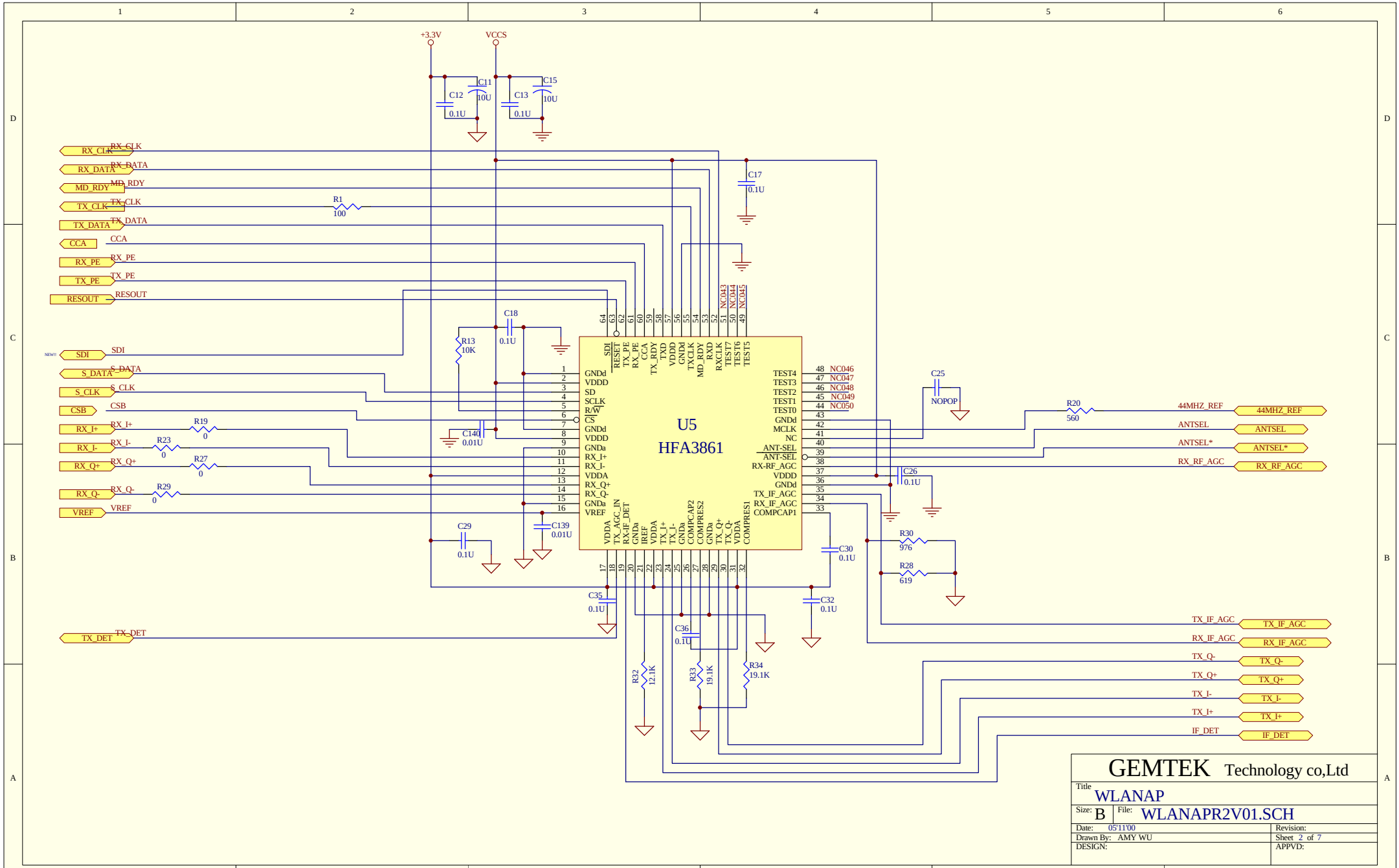
U5
HFA3861
+3.3V
VCCS
C11 10U
C12 0.1U
C13 0.1U
C15 10U
C17 0.1U
C18 0.1U
C140 0.01U
C139 0.01U
C29 0.1U
C35 0.1U
C36 0.1U
C30 0.1U
C32 0.1U
C26 0.1U
C25 NOPOP
R1 100
R13 10K
R19 0
R23 0
R27 0
R29 0
R20 560
R30 976
R28 619
R32 12.1K
R33 19.1K
R34 19.1K
RX_CLK
RX_DATA
MD_RDY
TX_CLK
TX_DATA
CCA
RX_PE
TX_PE
RESOUT
SDI
S_DATA
S_CLK
CSB
RX_I+
RX_I-
RX_Q+
RX_Q-
VREF
TX_DET
44MHZ_REF
ANTSEL
ANTSEL*
RX_RF_AGC
TX_IF_AGC
RX_IF_AGC
TX_Q-
TX_Q+
TX_I-
TX_I+
IF_DET
GEMTEK Technology co,Ltd
Title WLANAP
Size: B File: WLANAPR2V01.SCH
Date: 05'11'00
Revision:
Drawn By: AMY WU
Sheet 2 of 7
DESIGN:
APPVD: