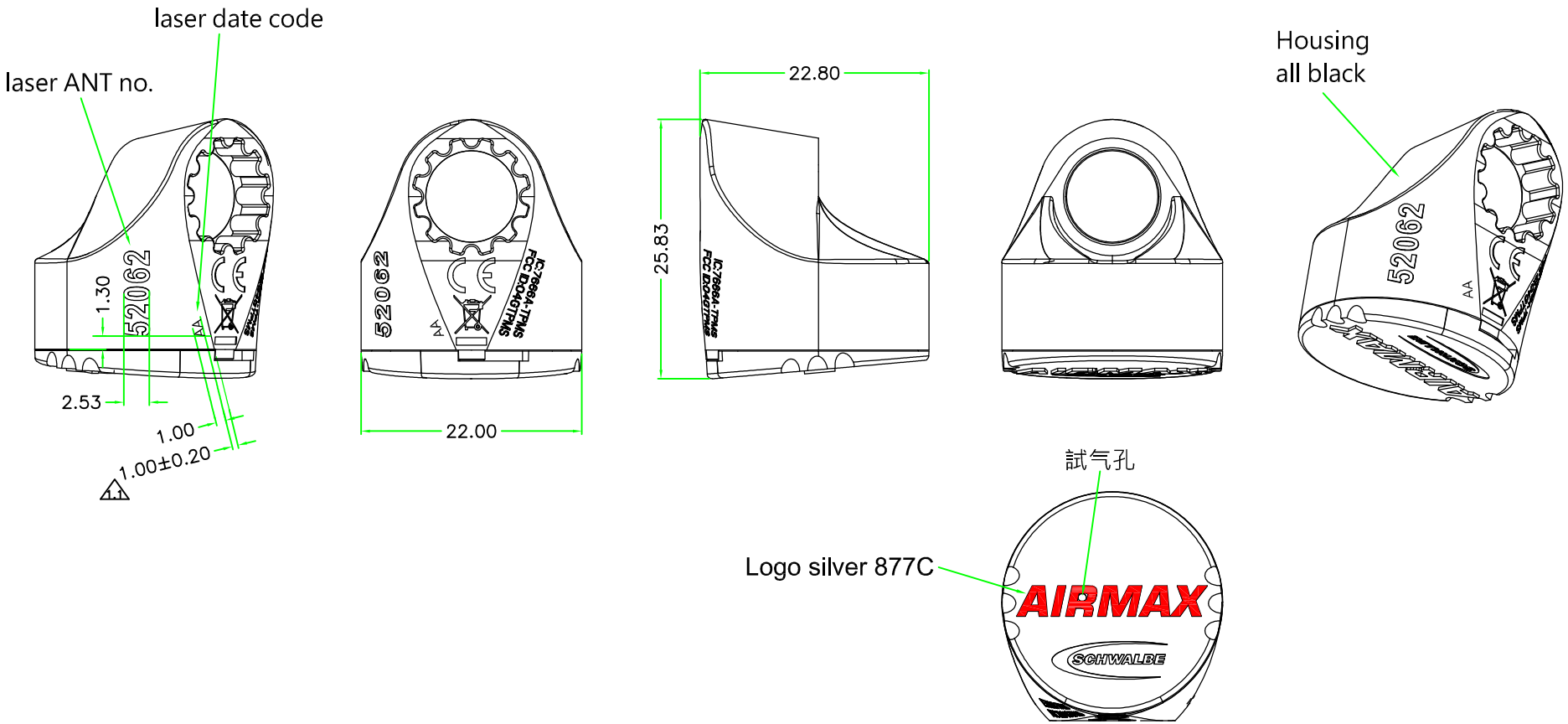

產品要求:

須符合Rohs及Reach的安全規格.
防水測試: 用1.0Bar內压.
UV測試: 放在UV燈箱內72小時不可出現變色.

DAYTON INDUSTRIAL CO. LTD. KENDY ENTERPRISE LTD.								unit: mm 3rd angle projection	LINEAR ± 0.1 ANGULAR ± 1° UNSPECIFIED TOLERANCE
TITLE:	Cosmetic drawing	CAV:		MODEL NAME:	Tire pressure sensor				VERSION NO: 1.1
PART NO:	B9-MS1360000	COLOR:		MODEL NO:	MS13600				DATE: 11-03-2022
MAT'L:	PC	SCALE:		DOC CONTROL NO:	006-1801				SHEET 1/1
FINISH:	TR-10	QTY:		DWN		CHKD			APPD

1.1	????	1.1	11/03/2022
1.0	REVISIONS	1.0	DATE