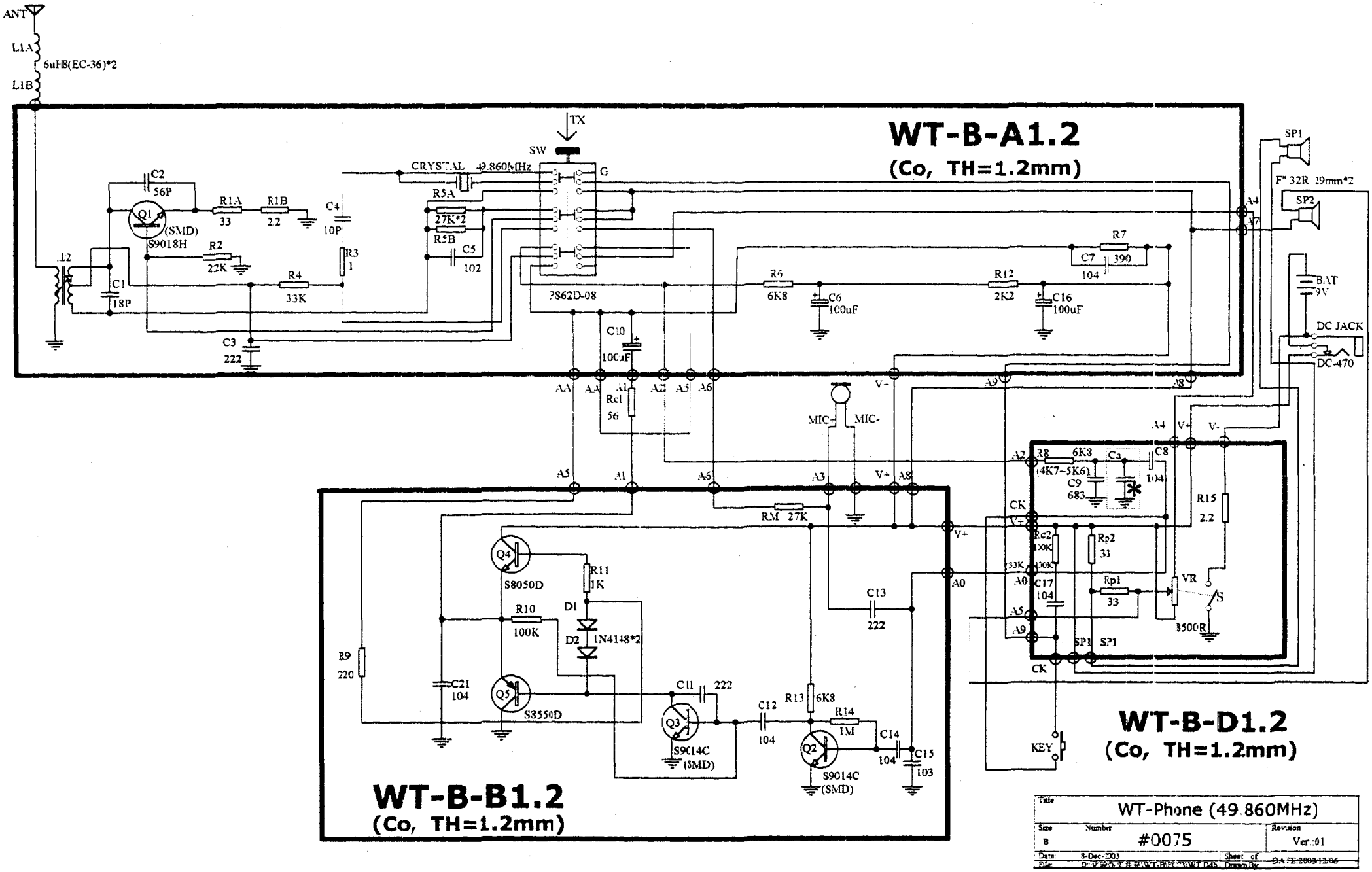
WT-B-A1.2
(Co, TH=1.2mm)
WT-B-B1.2
(Co, TH=1.2mm)
WT-B-D1.2
(Co, TH=1.2mm)
ANT
L1A
6uHB(EC-36)*2
L1B
TX
SW
CRYSTAL 49.860MHz
G
C2
56P
Q1
(SMD)
S9018H
R1A
33
R1B
2.2
C4
10P
R5A
27K*2
R5B
C5
102
R2
22K
R3
1
R4
33K
L2
C1
18P
C3
222
PS62D-08
C10
100uF
R6
6K8
C6
100uF
R12
2K2
C16
100uF
R7
390
C7
104
SP1
F" 32R 29mm*2
SP2
BAT
9V
DC JACK
DC-470
A4
A7
A1
A2
A5
A6
A3
A8
A9
A0
V-
V+
Rc1
56
MIC-
MIC-
RM 27K
Q4
S8050D
R11
1K
R10
100K
D1
D2
1N4148*2
R9
220
C21
104
Q5
S8550D
C11
222
Q3
S9014C
(SMD)
C12
104
R13
6K8
R14
1M
Q2
S9014C
(SMD)
C14
104
C15
103
C13
222
R8
6K8
(4K7~5K6)
Ca
C8
104
C9
683
CK
Rc2
100K
Rp2
33
C17
104
Rp1
33
VR
3500R
S
R15
2.2
SP1
KEY
Title
WT-Phone (49.860MHz)
Size
B
Number
#0075
Revision
Ver.:01
Date
9-Dec-2003
Sheet of
Drawn By: