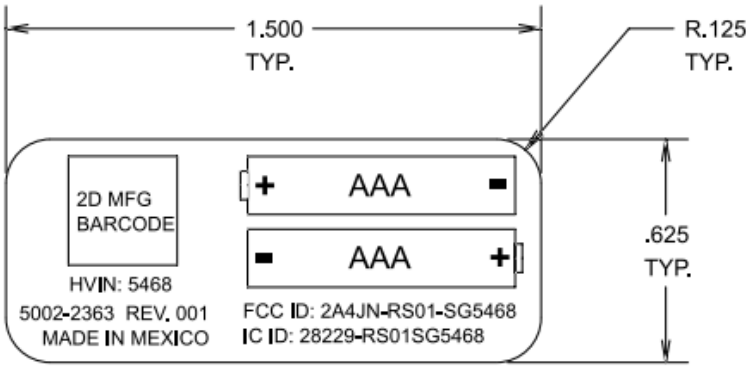
1.500
TYP.
R.125
TYP.
2D MFG
BARCODE
+ AAA -
- AAA +
.625
TYP.
HVIN: 5468
5002-2363 REV. 001
MADE IN MEXICO
FCC ID: 2A4JN-RS01-SG5468
IC ID: 28229-RS01SG5468

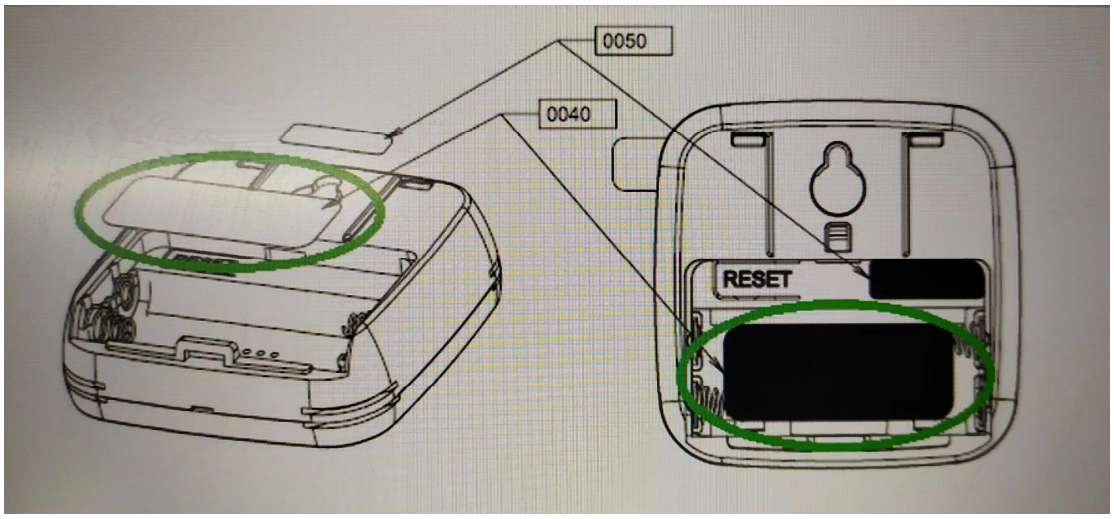
0050
0040
RESET