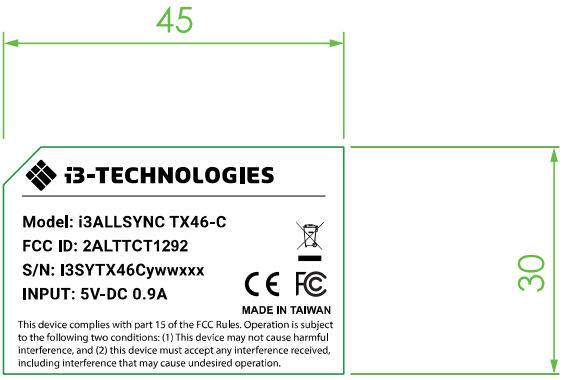

Change log:			
28/11/2023 RR	New logo; Model name; Serial Number update (45-> 46)		

Material:	This drawing and any information or descriptive material set out on it are the confidential and copyright property of ***i3-TECHNOLOGIES*** and MAY NOT BE DISCLOSED, COPIED, LOANED in whole or part or used for any purpose without the written permission of ***i3-TECHNOLOGIES***.	Description: **Updated from file Product Label - i3SYNC TX45-C on 28/11/2023 by Rudi Reynders**
Finish:		Drawn by: / Drawn Date: 27/08/2024
Unless Otherwise Stated: Linear Tol.: **±0.2**, Angular Tol.: **0°15'** Surface Finish: **0.8µm** All Dimensions: **mm**	Document Type:	Checked/Approved by: / Checked/Approved Date:
Drawing Scale: **1:1**		
Approx Weight: Kg / Drawing Produced In Accordance With: **BS8888**	Legal Owner: i3-TECHNOLOGIES Nijverheidslaan 60, 8540 Deerlijk Belgium	Part Number: Product Label - i3SYNC TX46-C
Projection Method: **THIRD ANGLE** / Sheet Size: **A4**		Drawing Number: / Sheet: **1 of 1** / Revision:

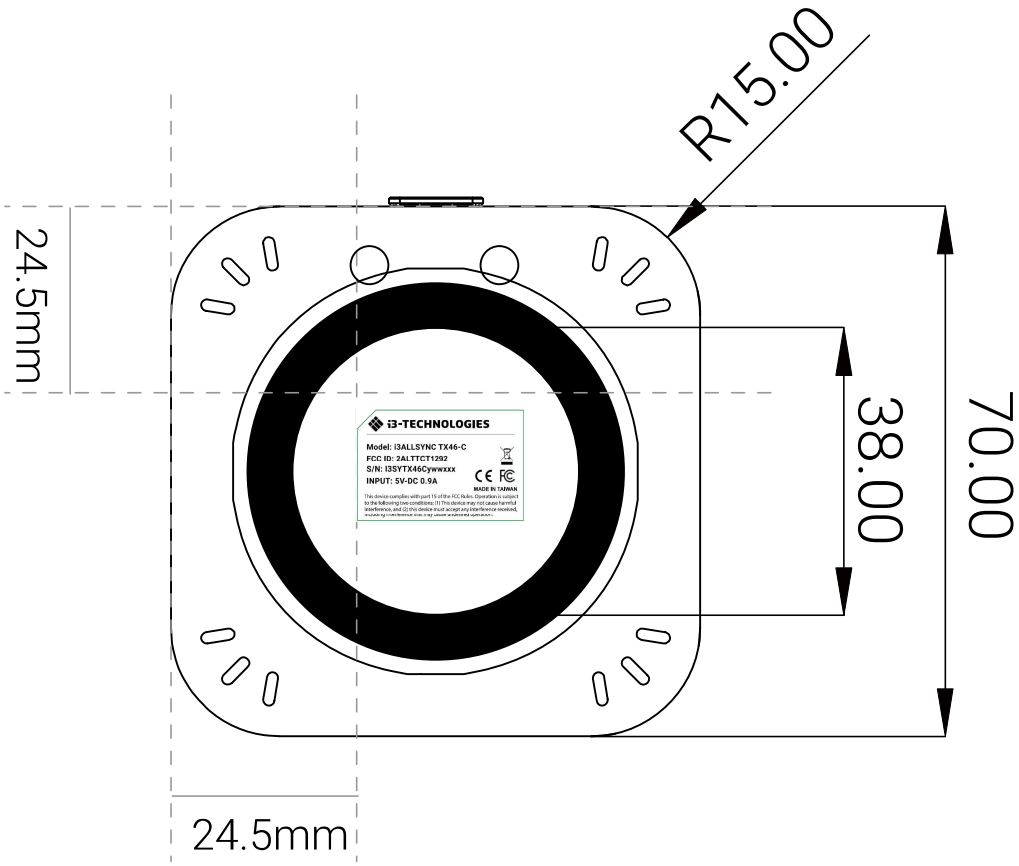
R15.00
24.5mm
38.00
70.00
24.5mm
i3-TECHNOLOGIES
Model: I3ALLSYNC TX46-C
FCC ID: 2ALTTCT1292
S/N: I3SYTX46Cywwxxx
INPUT: 5V-DC 0.9A
MADE IN TAIWAN
This device complies with part 15 of the FCC Rules. Operation is subject to the following two conditions: (1) This device may not cause harmful interference, and (2) this device must accept any interference received, including interference that may cause undesired operation.