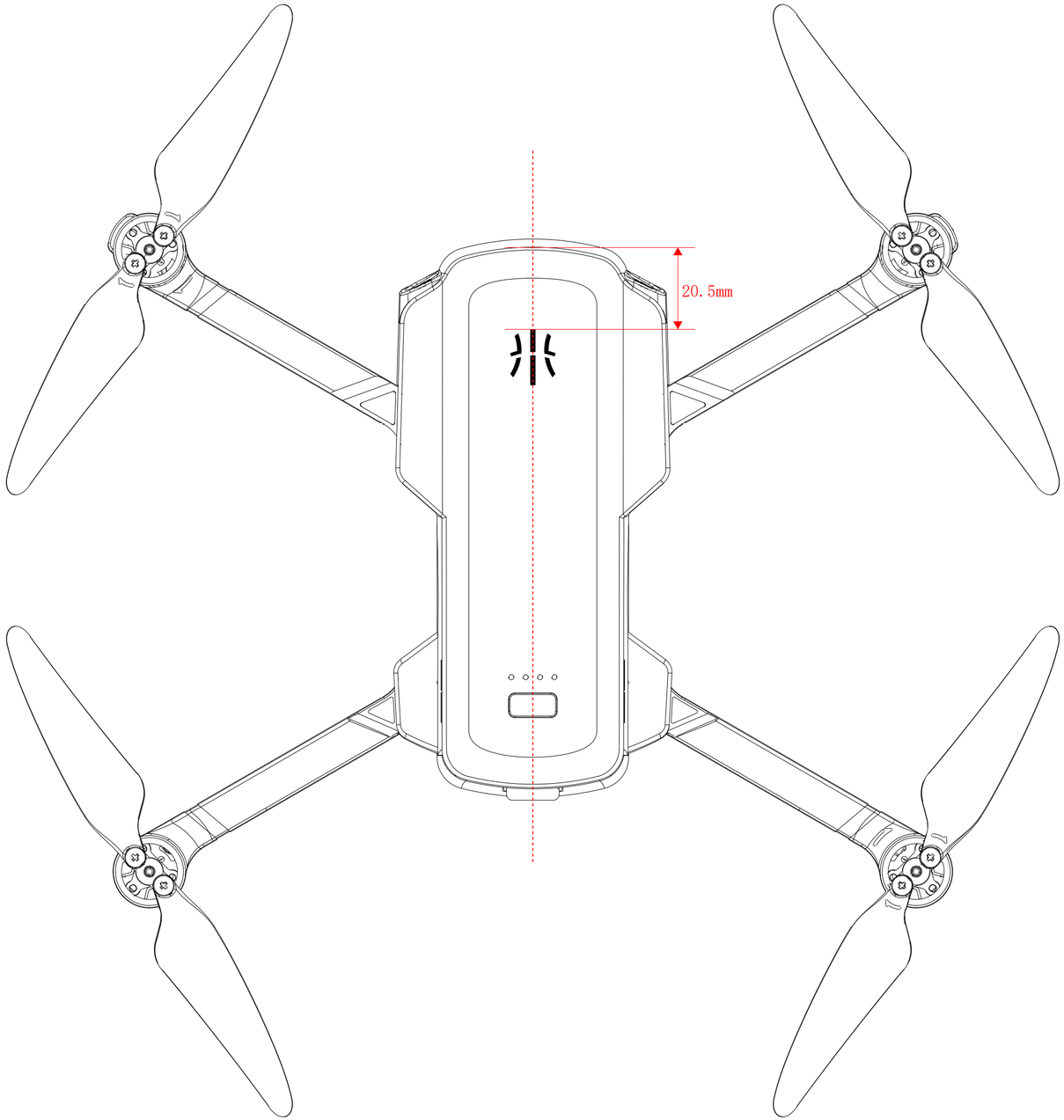
20.5mm

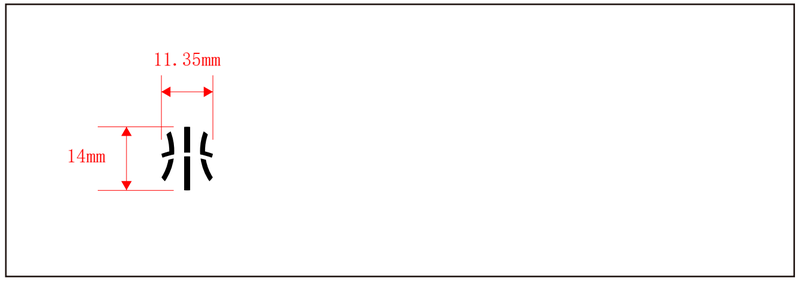
11.35mm
14mm

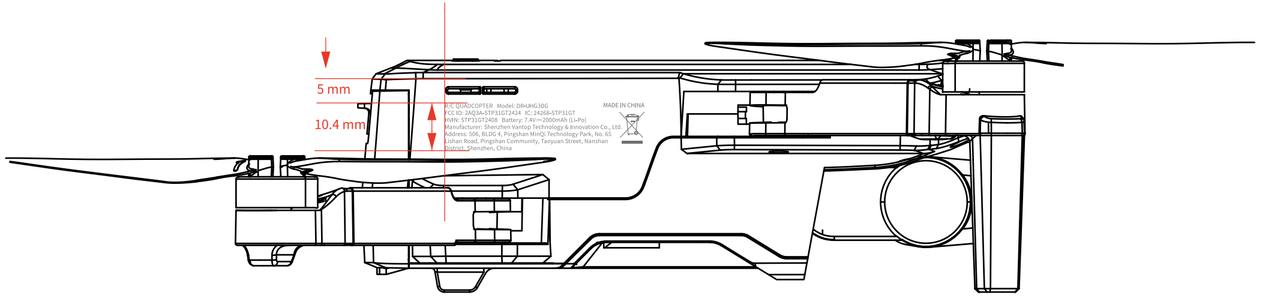
5 mm
10.4 mm
R/C QUADCOPTER Model: D8HJHG30G
FCC ID: 2AQJA-STP31GT2424 IC: 24268-STP31GT
HVIN: STP31GT2408 Battery: 7.4V⎓2000mAh (Li-Po)
Manufacture: Shenzhen Vantop Technology & Innovation Co., Ltd
Address: 506, BLDG 4, Pingshan MinQi Technology Park, No. 65
Lishan Road, Pingshan Community, Taoyuan Street, Nanshan
District, Shenzhen, China
MADE IN CHINA

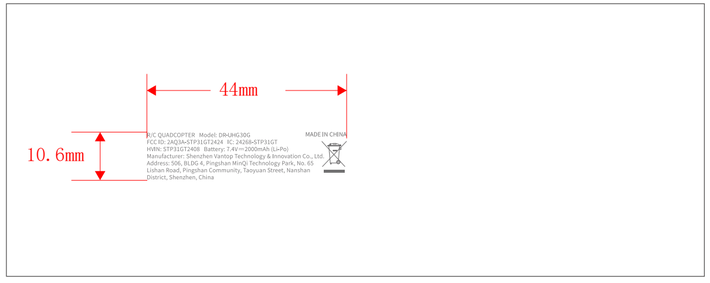
44mm
10. 6mm
R/C QUADCOPTER Model: D8HJHG30G
FCC ID: 2AQJA-STP31GT2424 IC: 24268-STP31GT
HVIN: STP31GT2408 Battery: 7.4V⎓2000mAh (Li-Po)
Manufacture: Shenzhen Vantop Technology & Innovation Co., Ltd
Address: 506, BLDG 4, Pingshan MinQi Technology Park, No. 65
Lishan Road, Pingshan Community, Taoyuan Street, Nanshan
District, Shenzhen, China
MADE IN CHINA

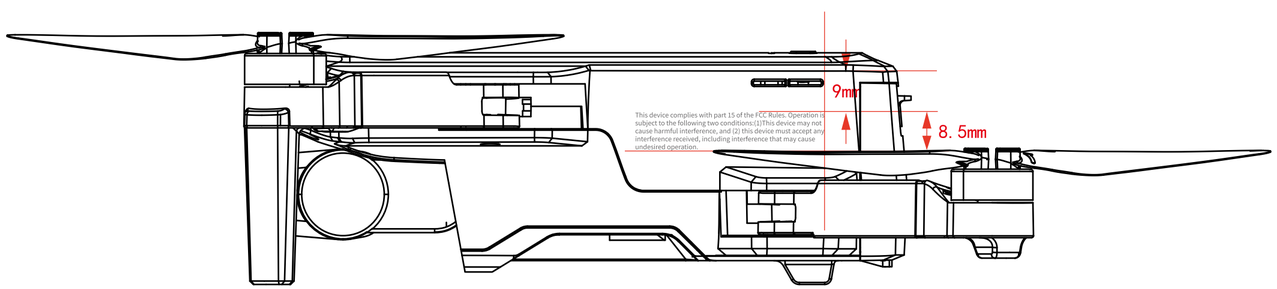
9mm
8. 5mm
This device complies with part 15 of the FCC Rules. Operation is subject to the following two conditions:(1)This device may not cause harmful interference, and (2) this device must accept any interference received, including interference that may cause undesired operation.

41. 6mm
8. 5mm
This device complies with part 15 of the FCC Rules. Operation is subject to the following two conditions:(1)This device may not cause harmful interference, and (2) this device must accept any interference received, including interference that may cause undesired operation.