WT-1

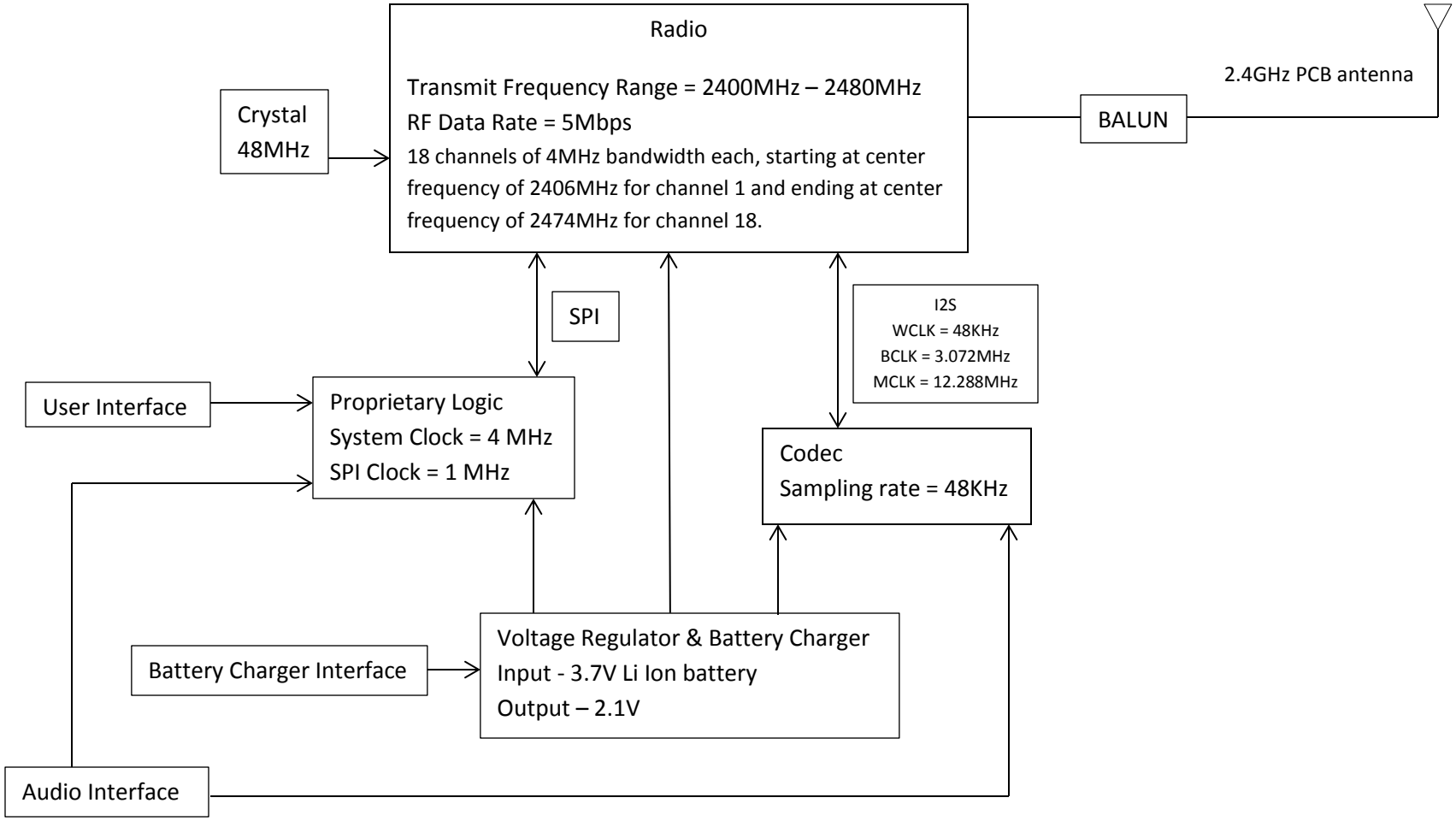
Radio
Transmit Frequency Range = 2400MHz – 2480MHz
RF Data Rate = 5Mbps
18 channels of 4MHz bandwidth each, starting at center frequency of 2406MHz for channel 1 and ending at center frequency of 2474MHz for channel 18.
Crystal 48MHz
BALUN
2.4GHz PCB antenna
SPI
I2S
WCLK = 48KHz
BCLK = 3.072MHz
MCLK = 12.288MHz
User Interface
Proprietary Logic
System Clock = 4 MHz
SPI Clock = 1 MHz
Codec
Sampling rate = 48KHz
Battery Charger Interface
Voltage Regulator & Battery Charger
Input - 3.7V Li Ion battery
Output – 2.1V
Audio Interface