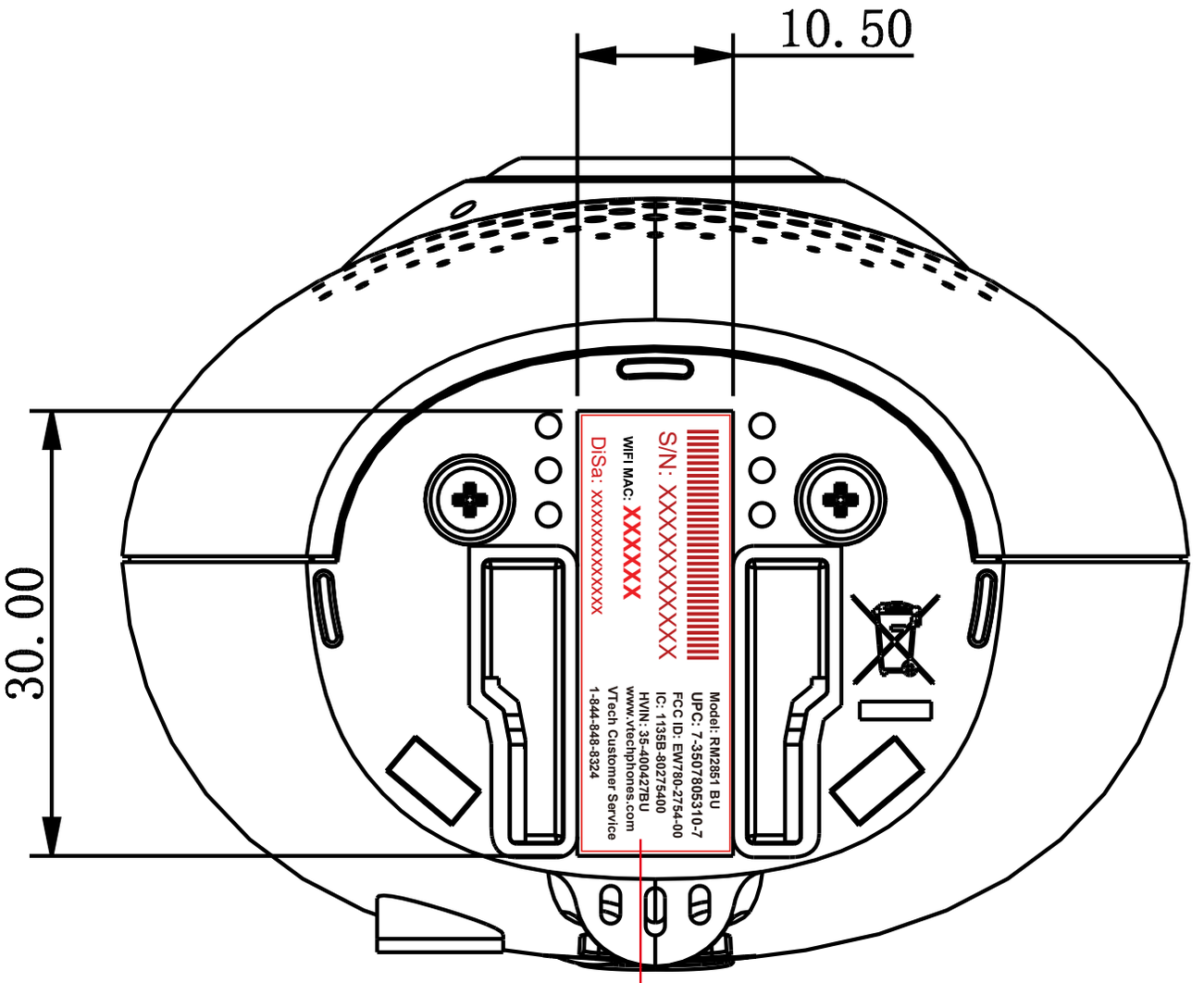

SIZE: 29.4X10 mm

S/N: XXXXXXXXXXXX
WIFI MAC: XXXXXX
DiSa: xxxxxxxxxxxxx

Model: RM2851 BU
UPC: 7-3507805310-7
FCC ID: EW780-2754-00
IC: 1135B-80275400
HVIN: 35-400427BU
www.vtechphones.com
VTech Customer Service
1-844-848-8324

S/N: XXXXXXXXXXXX
WIFI MAC: XXXXXX
DiSa: xxxxxxxxxxxxx

Model: RM2851-2 BU
UPC: 7-3507805310-7
FCC ID: EW780-2754-00
IC: 1135B-80275400
HVIN: 35-400427BU
www.vtechphones.com
VTech Customer Service
1-844-848-8324

S/N: XXXXXXXXXXXX
WIFI MAC: XXXXXX
DiSa: xxxxxxxxxxxxx

Model: RM2751 BU
UPC: 7-3507805310-7
FCC ID: EW780-2754-00
IC: 1135B-80275400
HVIN: 35-400427BU
www.vtechphones.com
VTech Customer Service
1-844-848-8324

S/N: XXXXXXXXXXXX
WIFI MAC: XXXXXX
DiSa: xxxxxxxxxxxxx

Model: RM2751-2 BU
UPC: 7-3507805310-7
FCC ID: EW780-2754-00
IC: 1135B-80275400
HVIN: 35-400427BU
www.vtechphones.com
VTech Customer Service
1-844-848-8324