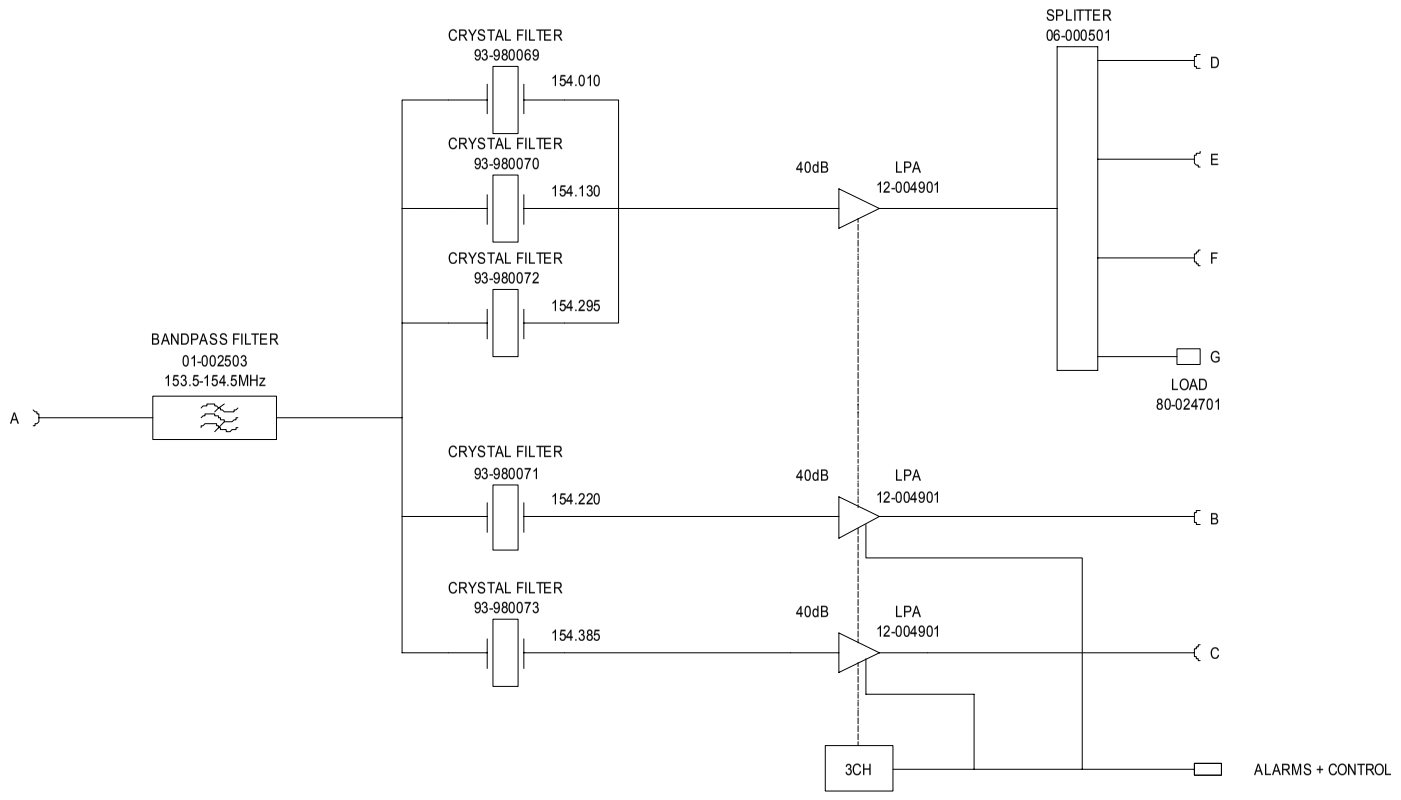

No	DESCRIPTION	DATE	BY
BA	ECN2452	06/02/02	MNR
AA	PROTOTYPE ISSUE	10/12/01	MNR

ISSUE

DRAWN	DATE	CHKD	APPD
MNR	10/12/01	GD	SS

ALL DIMENSIONS ARE IN mm UNLESS OTHERWISE STATED

THIS IS A PROPRIETARY DESIGN OF AERIAL FACILITIES LTD. REPRODUCTION OR USE OF THIS DESIGN BY OTHERS IS PERMISSIBLE ONLY IF EXPRESSLY AUTHORISED IN WRITING BY AERIAL FACILITIES LTD.

TOLERANCES
NO DECIMAL PLACE ± 1mm
ONE DECIMAL PLACE ± 0.3mm
TWO DECIMAL PLACES ± 0.1mm

SCALE
N.T.S

Aerial Facilities Limited
England
Tel : 01494 777000
Fax : 01494 777002

TITLE
VHF DOWNLINK SPLITTER
SYSTEM DIAGRAM

CUSTOMER
DRAWING No
50-030582
A3

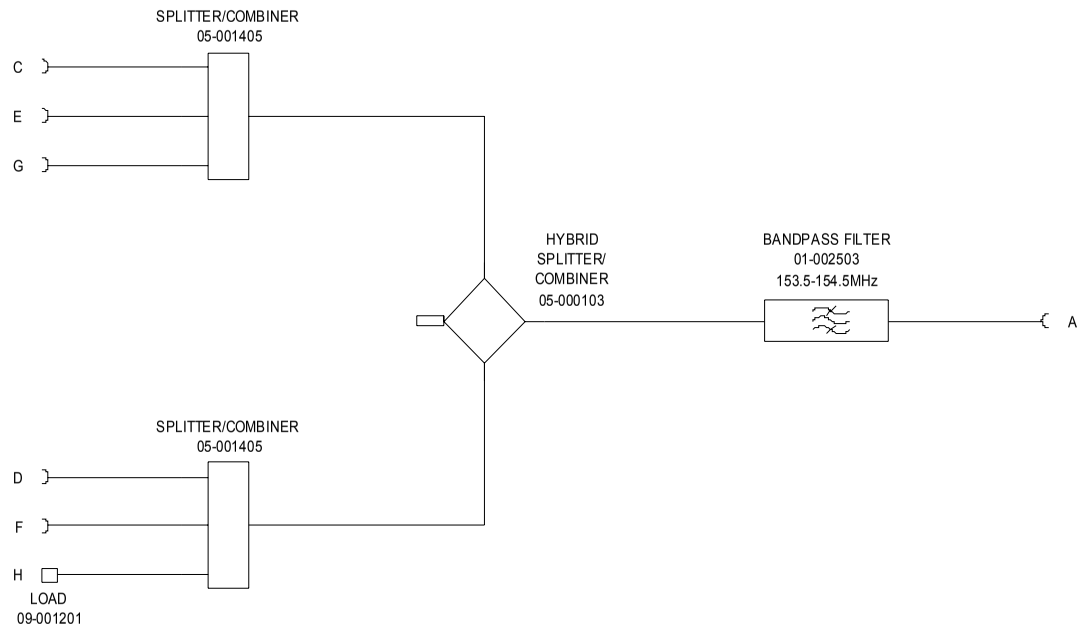

No	DESCRIPTION	DATE	BY
AA	PROTOTYPE ISSUE	10/12/01	MNR

ISSUE

DRAWN	DATE
MNR	10/12/01
CHKD GD	APPD SS

ALL DIMENSIONS ARE IN mm
UNLESS OTHERWISE STATED

THIS IS A PROPRIETARY DESIGN OF AERIAL FACILITIES LTD.
REPRODUCTION OR USE OF THIS DESIGN BY OTHERS IS
PERMISSIBLE ONLY IF EXPRESSLY AUTHORISED IN WRITING
BY AERIAL FACILITIES LTD.

TOLERANCES
NO DECIMAL PLACE ± 1mm
ONE DECIMAL PLACE ± 0.3mm
TWO DECIMAL PLACES ± 0.1mm

SCALE
N.T.S

Aerial Facilities Limited
England
Tel : 01494 777000
Fax : 01494 777002

TITLE
VHF UPLINK/DOWNLINK COMBINER
SYSTEM DIAGRAM

CUSTOMER
DRAWING No
50-030583
A3

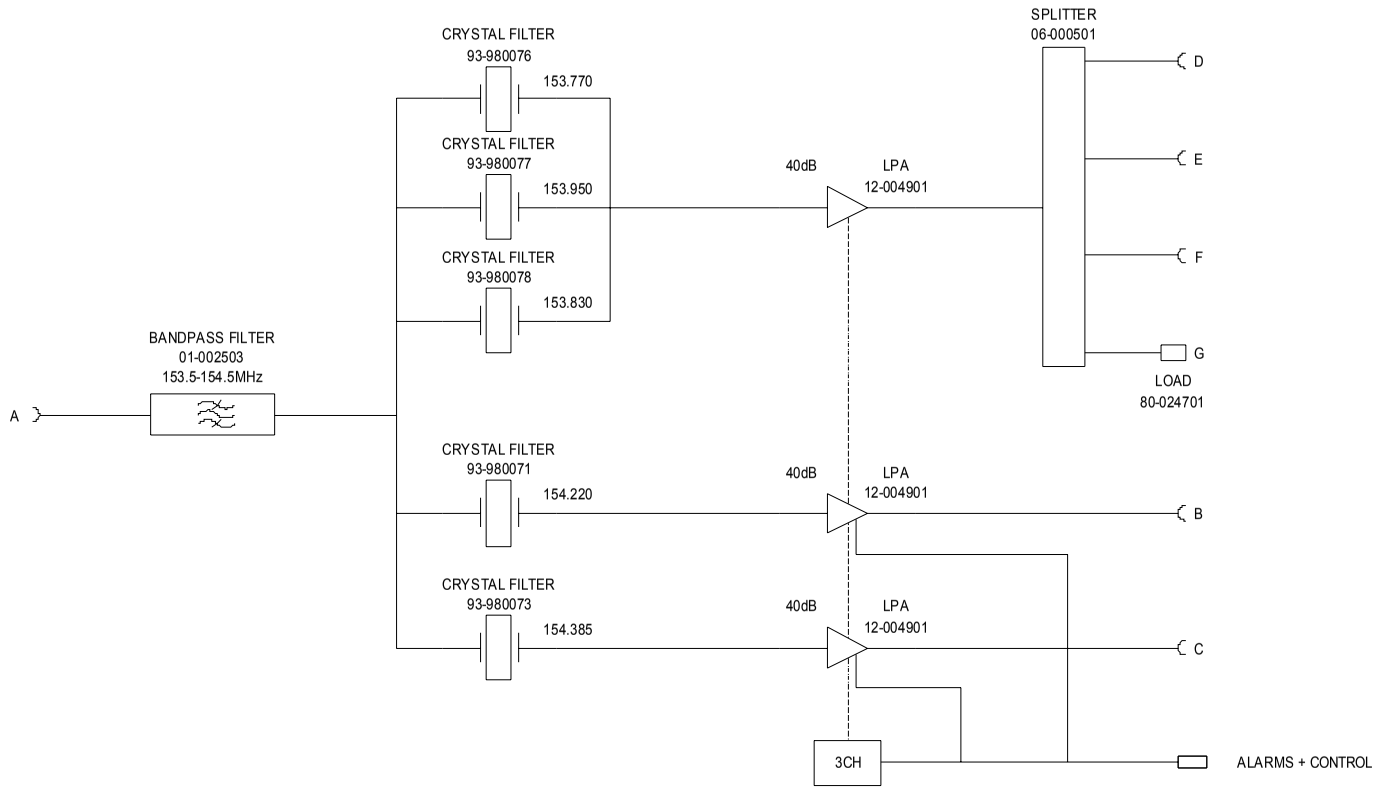

No	DESCRIPTION	DATE	BY
BA	ECN2605	16/05/02	MNR
AA	PROTOTYPE ISSUE	10/12/01	MNR

ISSUE

DRAWN	DATE
MNR	10/12/01
CHKD	APPD
GD	SS

ALL DIMENSIONS ARE IN mm UNLESS OTHERWISE STATED

THIS IS A PROPRIETARY DESIGN OF AERIAL FACILITIES LTD. REPRODUCTION OR USE OF THIS DESIGN BY OTHERS IS PERMISSIBLE ONLY IF EXPRESSLY AUTHORISED IN WRITING BY AERIAL FACILITIES LTD.

TOLERANCES
NO DECIMAL PLACE ± 1mm
ONE DECIMAL PLACE ± 0.3mm
TWO DECIMAL PLACES ± 0.1mm

SCALE
N.T.S

Aerial Facilities Limited
England
Tel : 01494 777000
Fax : 01494 777002

TITLE
VHF UPLINK SPLITTER
SYSTEM DIAGRAM

CUSTOMER
DRAWING No
50-030584
A3

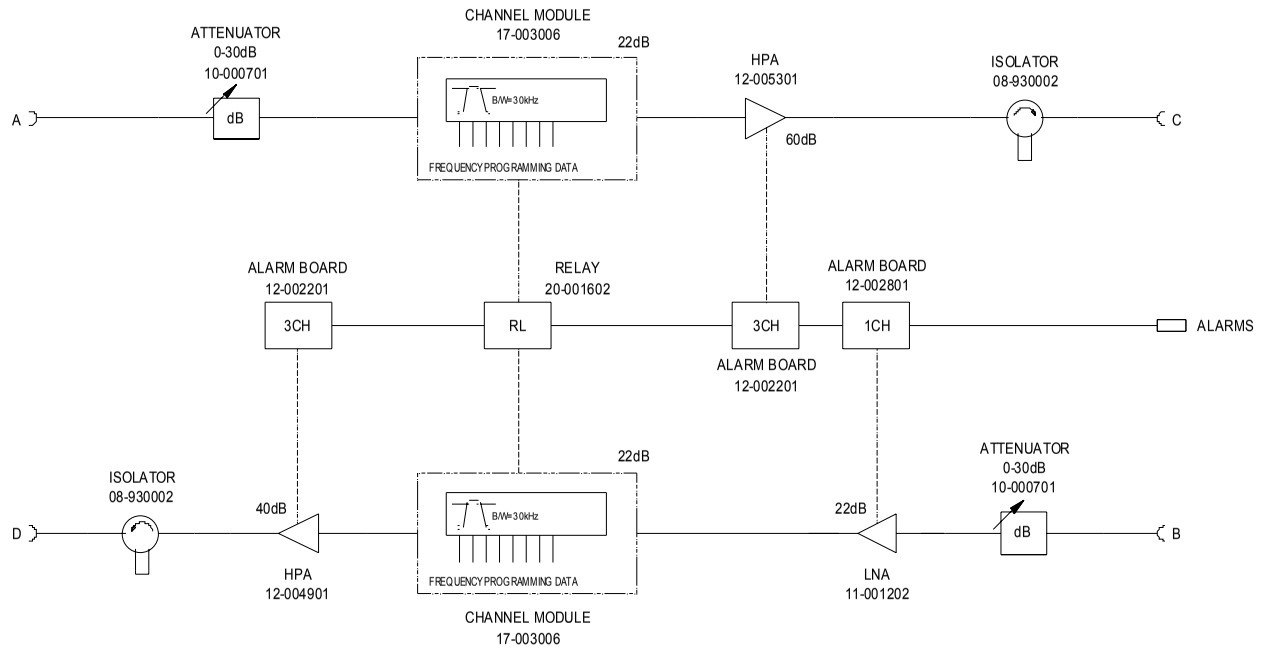

No	DESCRIPTION	DATE	BY
AA	PROTOTYPE ISSUE	10/12/01	MNR

ISSUE

DRAWN	DATE
MNR	10/12/01
CHKD GD	APPD SS

ALL DIMENSIONS ARE IN mm
UNLESS OTHERWISE STATED

THIS IS A PROPRIETARY DESIGN OF AERIAL FACILITIES LTD.
REPRODUCTION OR USE OF THIS DESIGN BY OTHERS IS
PERMISSIBLE ONLY IF EXPRESSLY AUTHORISED IN WRITING
BY AERIAL FACILITIES LTD.

TOLERANCES
NO DECIMAL PLACE ± 1mm
ONE DECIMAL PLACE ± 0.3mm
TWO DECIMAL PLACES ± 0.1mm

SCALE
N.T.S

Aerial Facilities Limited
England
Tel : 01494 777000
Fax : 01494 777002

TITLE
VHF DUPLEX CM
SYSTEM DIAGRAM

CUSTOMER
DRAWING No
50-030585
A3

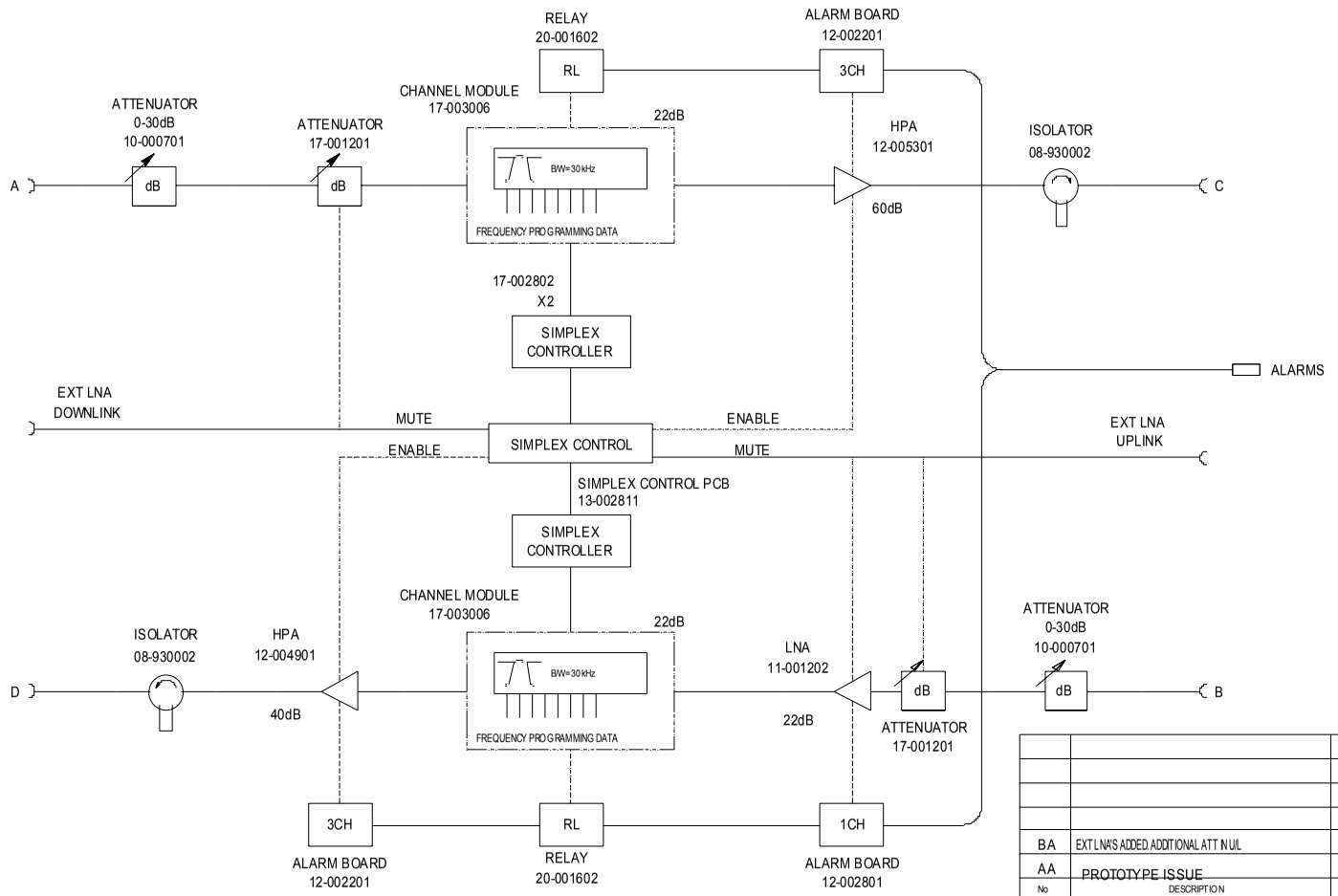

No	DESCRIPTION	DATE	BY
BA	EXT LNA'S ADDED, ADDITIONAL ATT IN U/L	19/7/02	MRB
AA	PROTOTYPE ISSUE	10/12/01	MNR

ISSUE

DRAWN	DATE
MNR	10/12/01
CHKD GD	APPD SS

ALL DIMENSIONS ARE IN mm UNLESS OTHERWISE STATED

THIS IS A PROPRIETARY DESIGN OF AERIAL FACILITIES LTD. REPRODUCTION OR USE OF THIS DESIGN BY OTHERS IS PERMISSIBLE ONLY IF EXPRESSLY AUTHORISED IN WRITING BY AERIAL FACILITIES LTD.

TOLERANCES
NO DECIMAL PLACE ± 1mm
ONE DECIMAL PLACE ± 0.3mm
TWO DECIMAL PLACES ± 0.1mm

SCALE
N.T.S

Aerial Facilities Limited
England
Tel : 01494 777000
Fax : 01494 777002

TITLE
VHF SIMPLEX CE
SYSTEM DIAGRAM

CUSTOMER
DRAWING.No
50-030586
A3

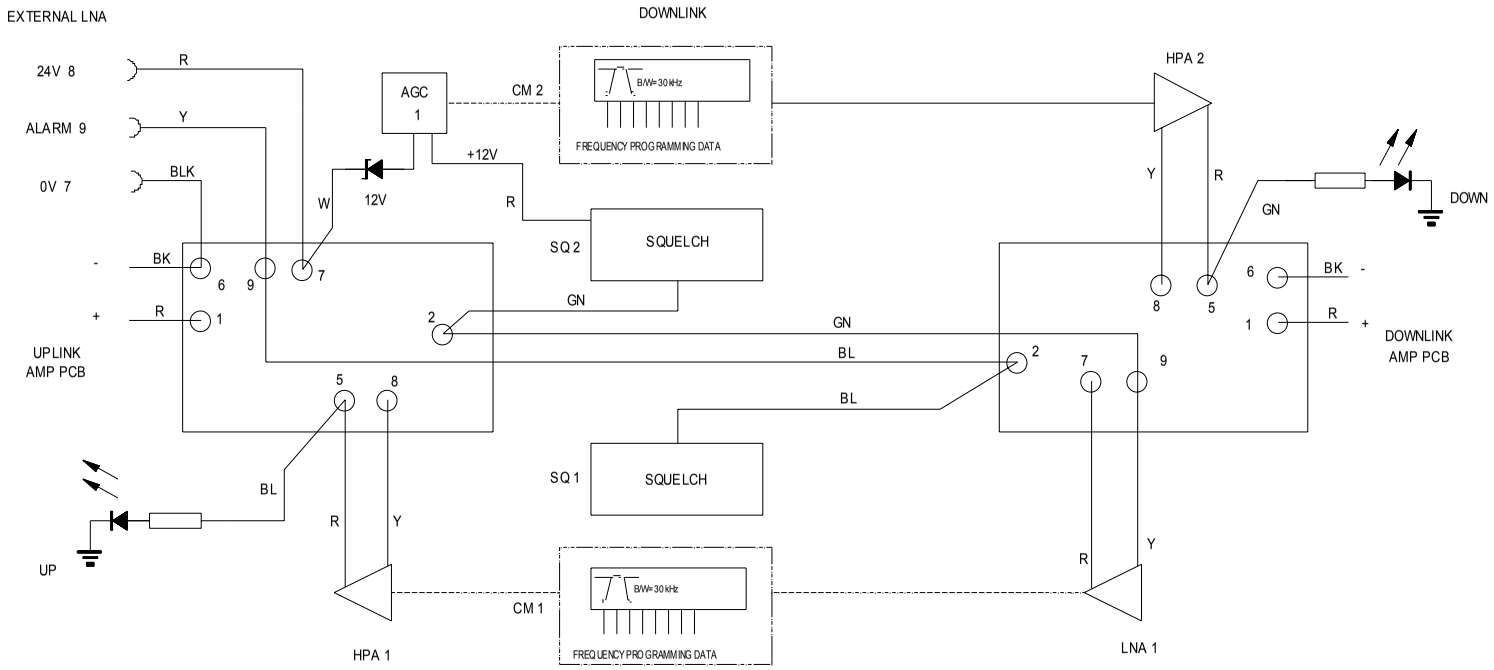

No	DESCRIPTION	DATE	BY
AA	PROTOTYPE	23/01/02	TAS

ISSUE

THIRD ANGLE PROJECTION

DRAWN	DATE
TAS	23/01/02
CHKD	APPD
SS	GD

ALL DIMENSIONS ARE IN mm
UNLESS OTHERWISE STATED

THIS IS A PROPRIETARY DESIGN OF AERIAL FACILITIES LTD.
REPRODUCTION OR USE OF THIS DESIGN BY OTHERS IS
PERMISSIBLE ONLY IF EXPRESSLY AUTHORISED IN WRITING
BY AERIAL FACILITIES LTD.

TOLERANCES
NO DECIMAL PLACE ± 1mm
ONE DECIMAL PLACE ± 0.3mm
TWO DECIMAL PLACES ± 0.1mm

SCALE
NTS

Aerial Facilities Limited
England
Tel : 01494 777000
Fax : 01494 777002

TITLE
VHF AIR INTERFACE SIMPLEX CM DC
CONTROL ,Q105106 ,CIRCUIT DIAGRAM

CUSTOMER
DRAWING No
50-030593
A3

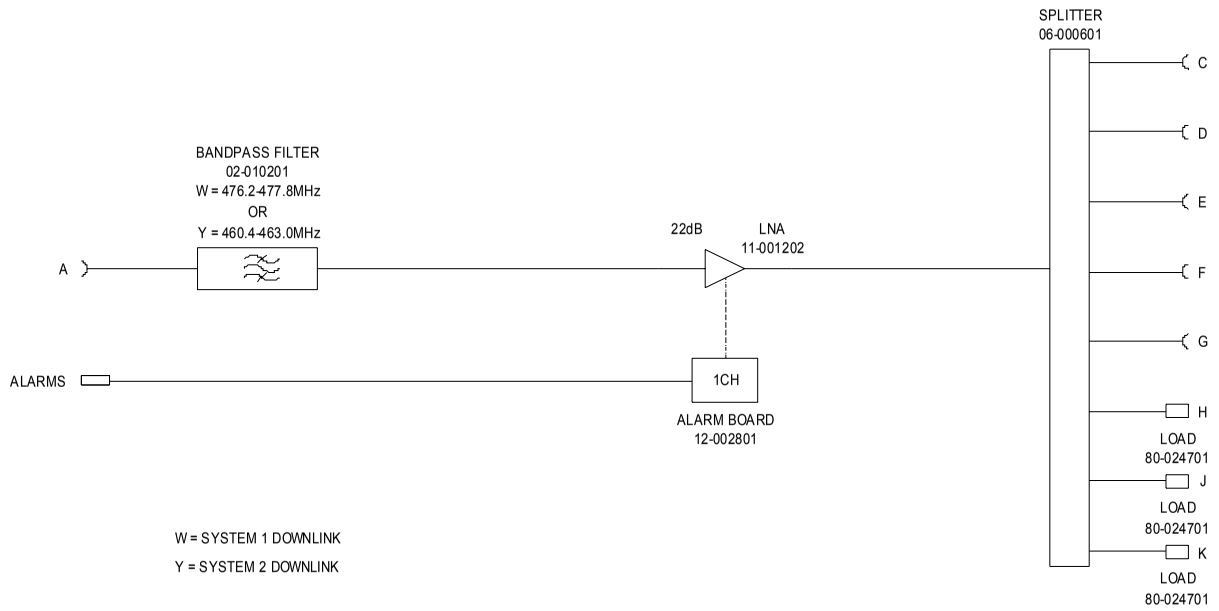

No	DESCRIPTION	DATE	BY
BA	ECN2452	06/02/02	MNR
AA	PROTOTYPE ISSUE	10/12/01	MNR

ISSUE

DRAWN	DATE	CHKD	APPD
MNR	10/12/01	GD	SS

ALL DIMENSIONS ARE IN mm
UNLESS OTHERWISE STATED

THIS IS A PROPRIETARY DESIGN OF AERIAL FACILITIES LTD.
REPRODUCTION OR USE OF THIS DESIGN BY OTHERS IS
PERMISSIBLE ONLY IF EXPRESSLY AUTHORISED IN WRITING
BY AERIAL FACILITIES LTD.

TOLERANCES
NO DECIMAL PLACE ± 1mm
ONE DECIMAL PLACE ± 0.3mm
TWO DECIMAL PLACES ± 0.1mm

SCALE
N.T.S

Aerial Facilities Limited
England
Tel : 01494 777000
Fax : 01494 777002

TITLE
UHF DOWNLINK SPLITTER
SYSTEM DIAGRAM

CUSTOMER
DRAWING No
50-030587
A3

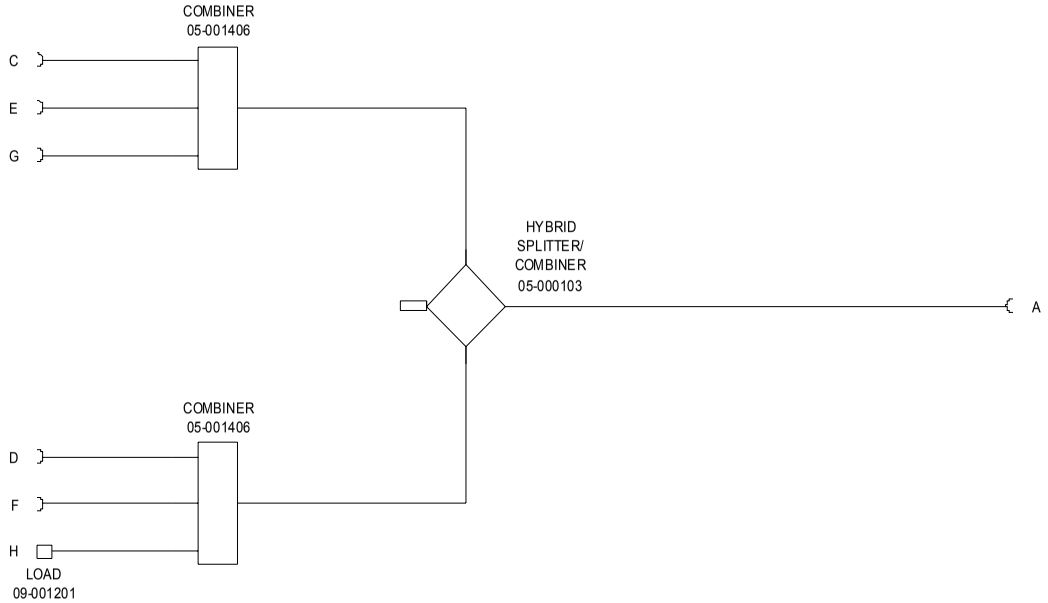

No	DESCRIPTION	DATE	BY
AA	PROTOTYPE ISSUE	10/12/01	MNR

ISSUE

DRAWN	DATE
MNR	10/12/01
CHKD GD	APPD SS

ALL DIMENSIONS ARE IN mm
UNLESS OTHERWISE STATED

THIS IS A PROPRIETARY DESIGN OF AERIAL FACILITIES LTD.
REPRODUCTION OR USE OF THIS DESIGN BY OTHERS IS
PERMISSIBLE ONLY IF EXPRESSLY AUTHORISED IN WRITING
BY AERIAL FACILITIES LTD.

TOLERANCES
NO DECIMAL PLACE ± 1mm
ONE DECIMAL PLACE ± 0.3mm
TWO DECIMAL PLACES ± 0.1mm

SCALE
N.T.S

Aerial Facilities Limited
England
Tel : 01494 777000
Fax : 01494 777002

TITLE
UHF DOWNLINK COMBINER
SYSTEM DIAGRAM

CUSTOMER
DRAWING No
50-030588
A3

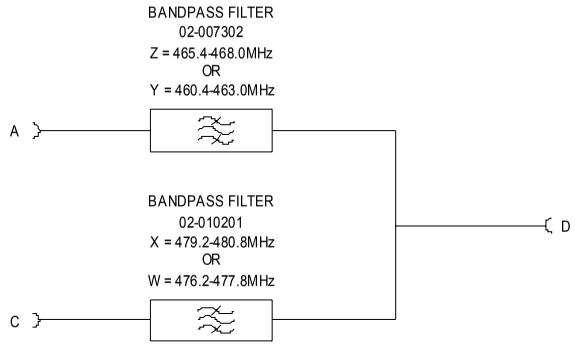

W = SYSTEM 1 DOWNLINK
X = SYSTEM 1 UPLINK
Y = SYSTEM 2 DOWNLINK
Z = SYSTEM 2 UPLINK

No	DESCRIPTION	DATE	BY
CA	CROSSBAND COUPLER REMOVED	18/7/02	MRB
BA	ECN2452	06/02/02	MNR
AA	PROTOTYPE ISSUE	10/12/01	MNR

ISSUE

DRAWN	DATE
MNR	10/12/01
CHKD GD	APPD SS

ALL DIMENSIONS ARE IN mm UNLESS OTHERWISE STATED

THIS IS A PROPRIETARY DESIGN OF AERIAL FACILITIES LTD. REPRODUCTION OR USE OF THIS DESIGN BY OTHERS IS PERMISSIBLE ONLY IF EXPRESSLY AUTHORISED IN WRITING BY AERIAL FACILITIES LTD.

TOLERANCES
NO DECIMAL PLACE ± 1 mm
ONE DECIMAL PLACE ± 0.3 mm
TWO DECIMAL PLACES ± 0.1 mm

SCALE
N.T.S

Aerial Facilities Limited
England
Tel : 01494 777000
Fax : 01494 777002

TITLE
UHF DUPLEXER/CBC
SYSTEM DIAGRAM

CUSTOMER
DRAWING.No
50-030589
A3

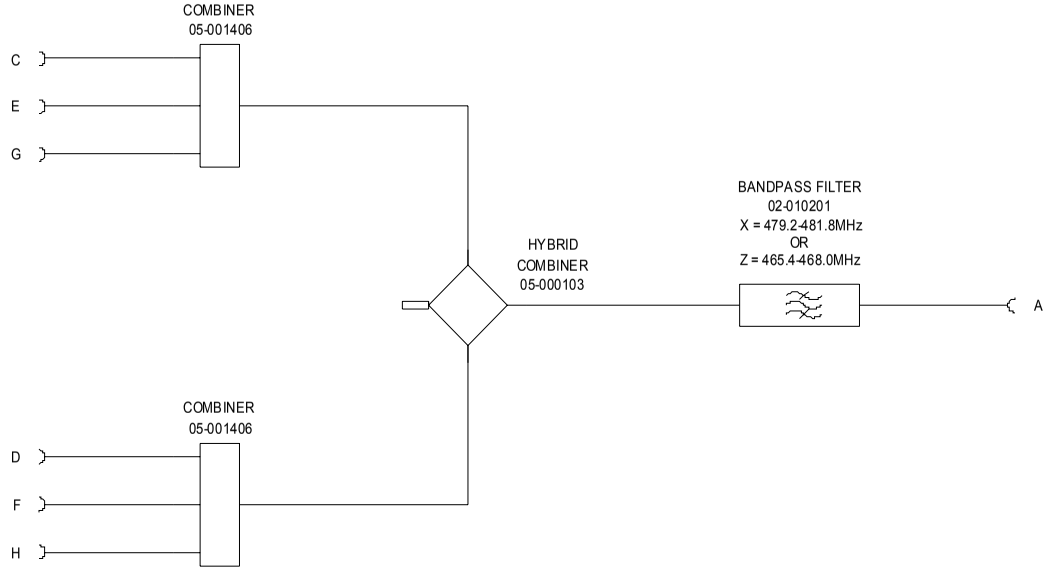

X = SYSTEM 1 UPLINK
Z = SYSTEM 2 UPLINK

No	DESCRIPTION	DATE	BY
BA	ECN2452	06/02/02	MNR
AA	PROTOTYPE ISSUE	10/12/01	MNR

ISSUE

DRAWN	DATE
MNR	10/12/01
CHKD GD	APPD SS

ALL DIMENSIONS ARE IN mm
UNLESS OTHERWISE STATED

THIS IS A PROPRIETARY DESIGN OF AERIAL FACILITIES LTD.
REPRODUCTION OR USE OF THIS DESIGN BY OTHERS IS
PERMISSIBLE ONLY IF EXPRESSLY AUTHORISED IN WRITING
BY AERIAL FACILITIES LTD.

TOLERANCES
NO DECIMAL PLACE ± 1mm
ONE DECIMAL PLACE ± 0.3mm
TWO DECIMAL PLACES ± 0.1mm

SCALE
N.T.S

Aerial Facilities Limited
England
Tel : 01494 777000
Fax : 01494 777002

TITLE
UHF UPLINK COMBINER
SYSTEM DIAGRAM

CUSTOMER
DRAWING No
50-030590
A3

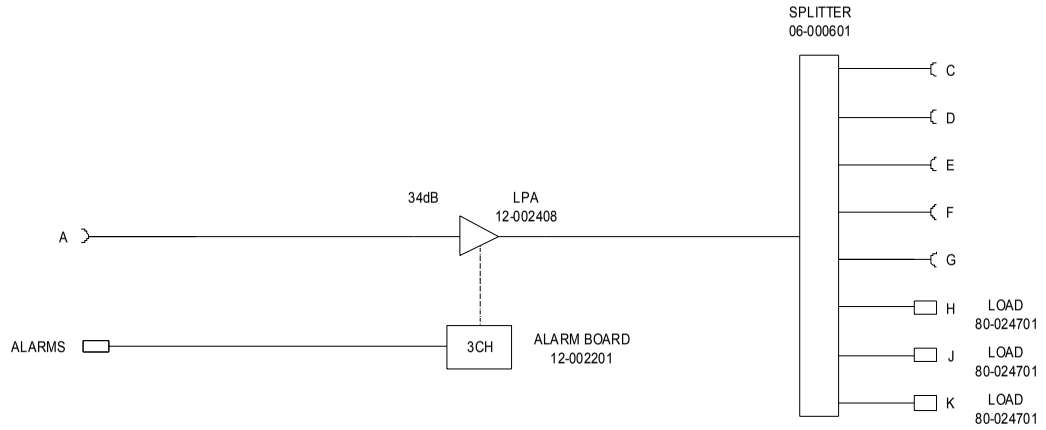

No	DESCRIPTION	DATE	BY
AA	PROTOTYPE ISSUE	10/12/01	MNR

ISSUE

DRAWN	DATE
MNR	10/12/01
CHKD GD	APPD SS

ALL DIMENSIONS ARE IN mm
UNLESS OTHERWISE STATED

THIS IS A PROPRIETARY DESIGN OF AERIAL FACILITIES LTD.
REPRODUCTION OR USE OF THIS DESIGN BY OTHERS IS
PERMISSIBLE ONLY IF EXPRESSLY AUTHORISED IN WRITING
BY AERIAL FACILITIES LTD.

TOLERANCES
NO DECIMAL PLACE ± 1mm
ONE DECIMAL PLACE ± 0.3mm
TWO DECIMAL PLACES ± 0.1mm

SCALE
N.T.S

Aerial Facilities Limited
England
Tel : 01494 777000
Fax : 01494 777002

TITLE
UHF UPLINK SPLITTER
SYSTEM DIAGRAM

CUSTOMER
DRAWING No
50-030591
A3

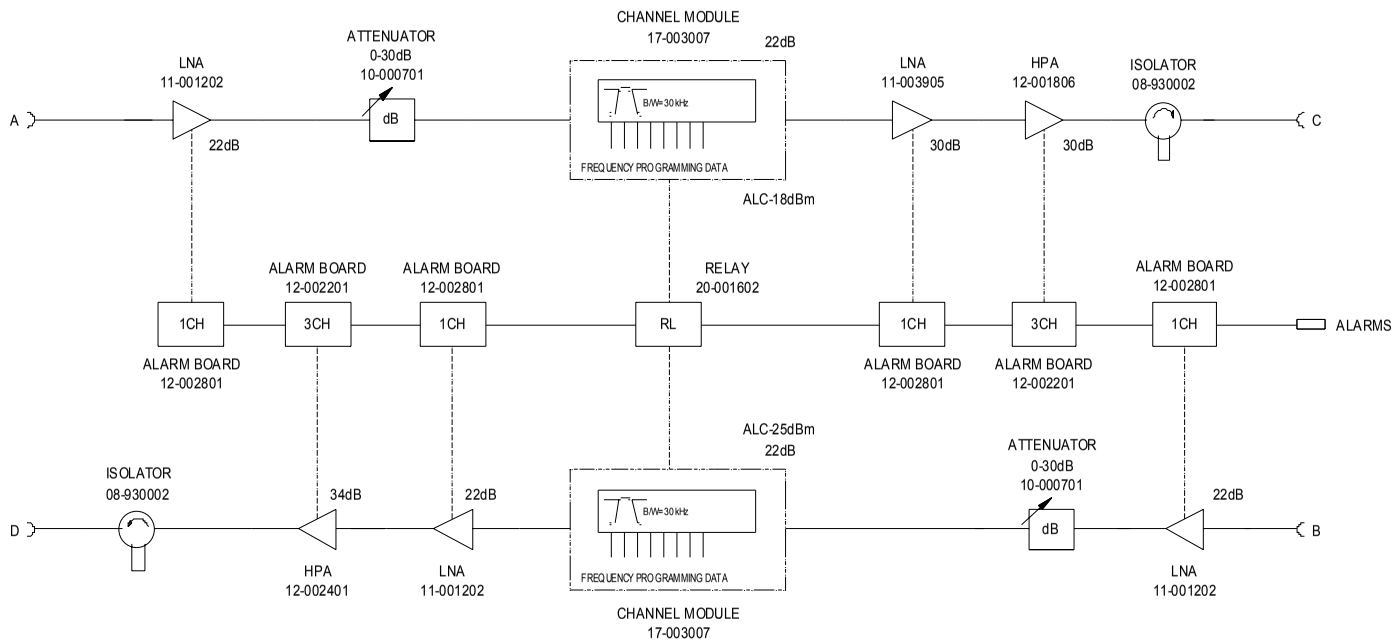

No	DESCRIPTION	DATE	BY
BA	ECN2452	06/02/02	MNR
AA	PROTOTYPE ISSUE	10/12/01	MNR

ISSUE

DRAWN	DATE
MNR	10/12/01
CHKD	APPD
GD	SS

ALL DIMENSIONS ARE IN mm UNLESS OTHERWISE STATED

THIS IS A PROPRIETARY DESIGN OF AERIAL FACILITIES LTD. REPRODUCTION OR USE OF THIS DESIGN BY OTHERS IS PERMISSIBLE ONLY IF EXPRESSLY AUTHORISED IN WRITING BY AERIAL FACILITIES LTD.

TOLERANCES
NO DECIMAL PLACE ± 1mm
ONE DECIMAL PLACE ± 0.3mm
TWO DECIMAL PLACES ± 0.1mm

SCALE
N.T.S

Aerial Facilities Limited
England
Tel : 01494 777000
Fax : 01494 777002

TITLE
UHF DUPLEX CM
SYSTEM DIAGRAM

CUSTOMER DRAWING No
50-030592

A3

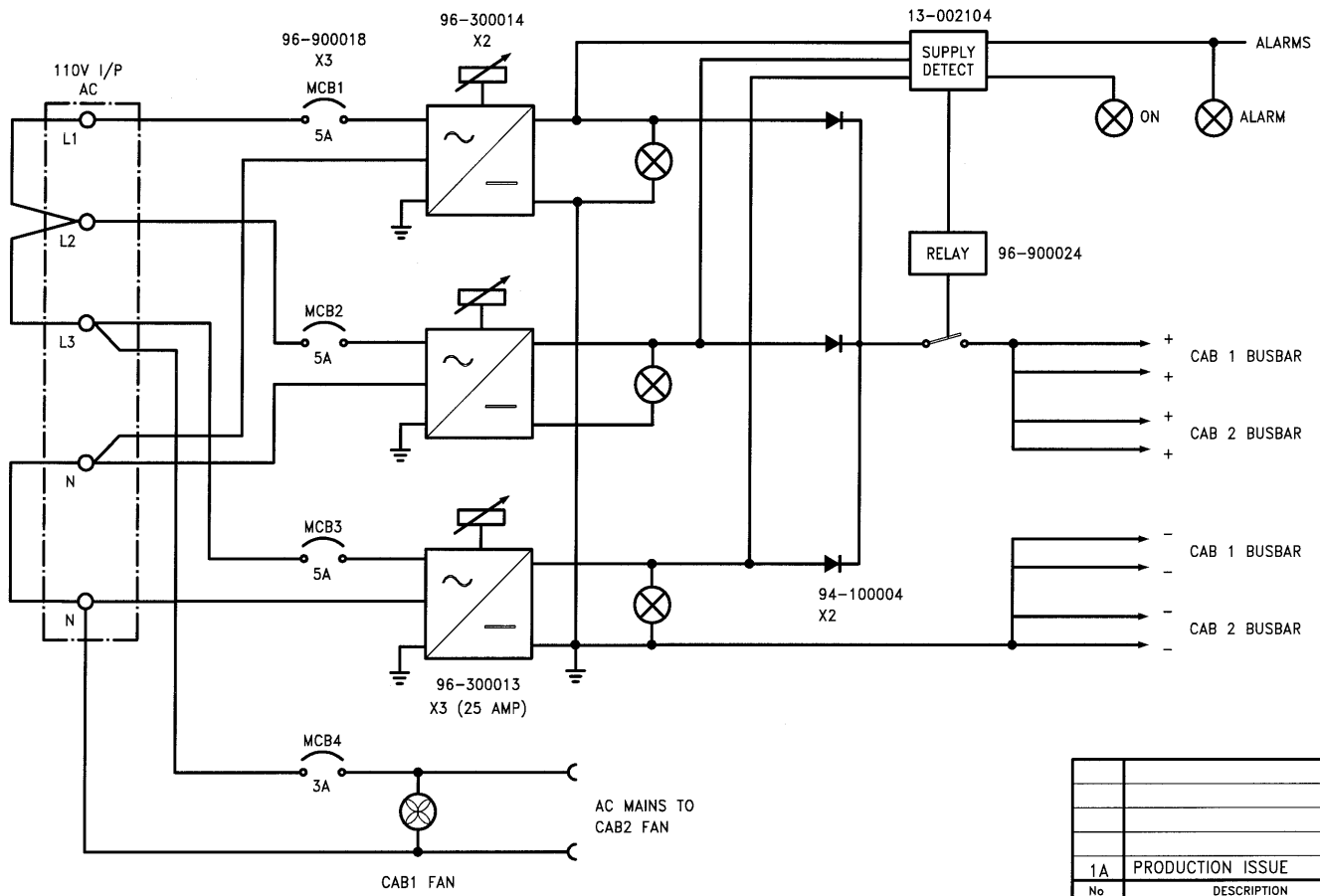

No	DESCRIPTION	DATE	BY
1A	PRODUCTION ISSUE	24/7/02	DBS

ISSUE

DRAWN	DATE
DBS	24/7/02
CHKD	APPD

ALL DIMENSIONS ARE IN mm UNLESS OTHERWISE STATED

THIS IS A PROPRIETARY DESIGN OF AERIAL FACILITIES LTD. REPRODUCTION OR USE OF THIS DESIGN BY OTHERS IS PERMISSIBLE ONLY IF EXPRESSLY AUTHORISED IN WRITING BY AERIAL FACILITIES LTD.

TOLERANCES
NO DECIMAL PLACE ± 1mm
ONE DECIMAL PLACE ± 0.3mm
TWO DECIMAL PLACES ± 0.1mm

SCALE
–

Aerial Facilities Limited
England
Tel : 01494 777000
Fax : 01494 777002

TITLE
MIDWAY 1 PSU SYSTEM

CUSTOMER

DRAWING.No
50-030594

A3

USED ON

06-0501-D

THIRDANGLE PROJECTION

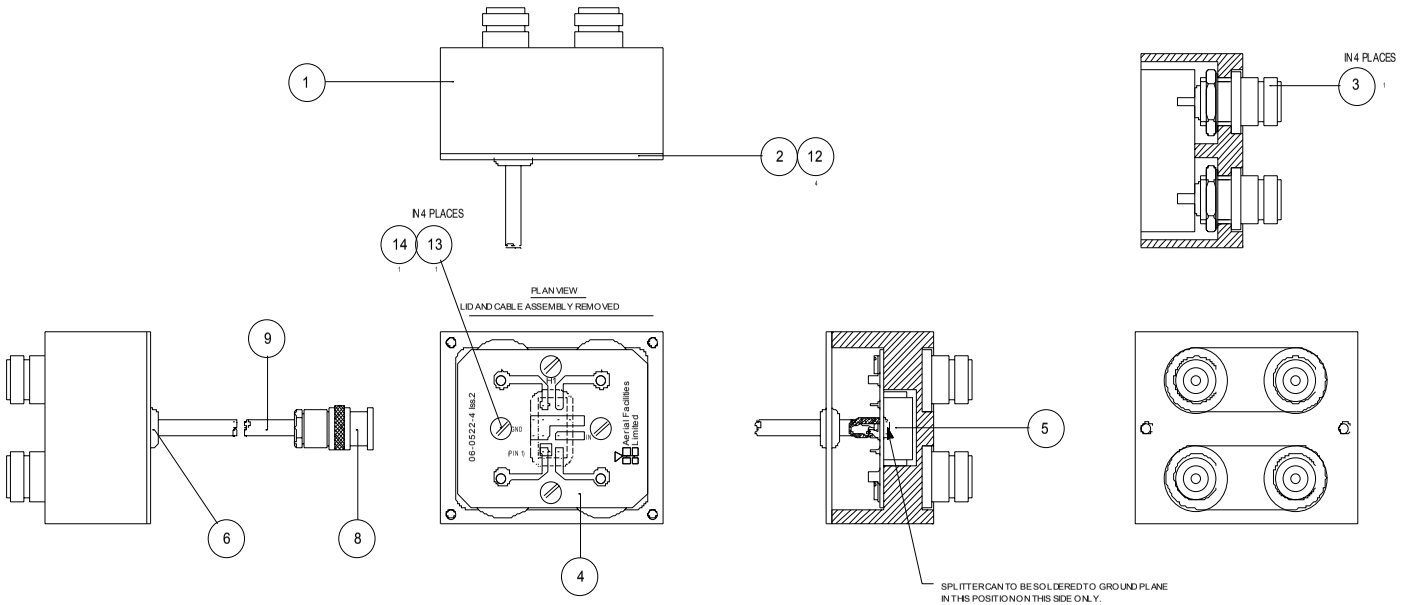

PIN 1 IS SURROUNDED BY BLUE INSULATION BEAD

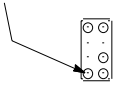

VIEW ON SPLITTER PINS

ENSURE CORRECT ORIENTATION OF SPLITTER ON PCB

NOTES:

1/ ALL SOLDERED CONNECTIONS TO BE MADE USING ITEM 7

2/ ITEM 9 TO BE CUT TO 170mm BEFORE TERMINATION

No	DESCRIPTION	DATE	
2A	PRODUCTION ISSUE (CR0962)	20/8	SEW
2	CR0376	10/8/92	DJL
1	PRODUCTION ISSUE	6/5/92	MRB

ISSUE

DRAWN: MRB

DATE: 01/05/92

CHKD:

APPD:

ALL DIMENSIONS ARE IN mm UNLESS OTHERWISE STATED

THIS IS A PROPRIETARY DESIGN OF AERIAL FACILITIES LTD. REPRODUCTION OR USE OF THIS DESIGN BY OTHERS IS PERMISSIBLE ONLY IF EXPRESSLY AUTHORISED IN WRITING BY AERIAL FACILITIES LTD.

TOLERANCES

NO DECIMAL PLACE ± 1mm
ONE DECIMAL PLACE ± 0.3mm
TWO DECIMAL PLACES ± 0.1mm

SCALE: 1:1

Aerial Facilities Ltd
England

Little Chalfont (0494) 763636
Telex 837786

TITLE

4 WAY RECEIVER HYBRID UNIT,
ASSEMBLY

CUSTOMER

DRG.No: 06-000501

ISS: 2A

USED ON

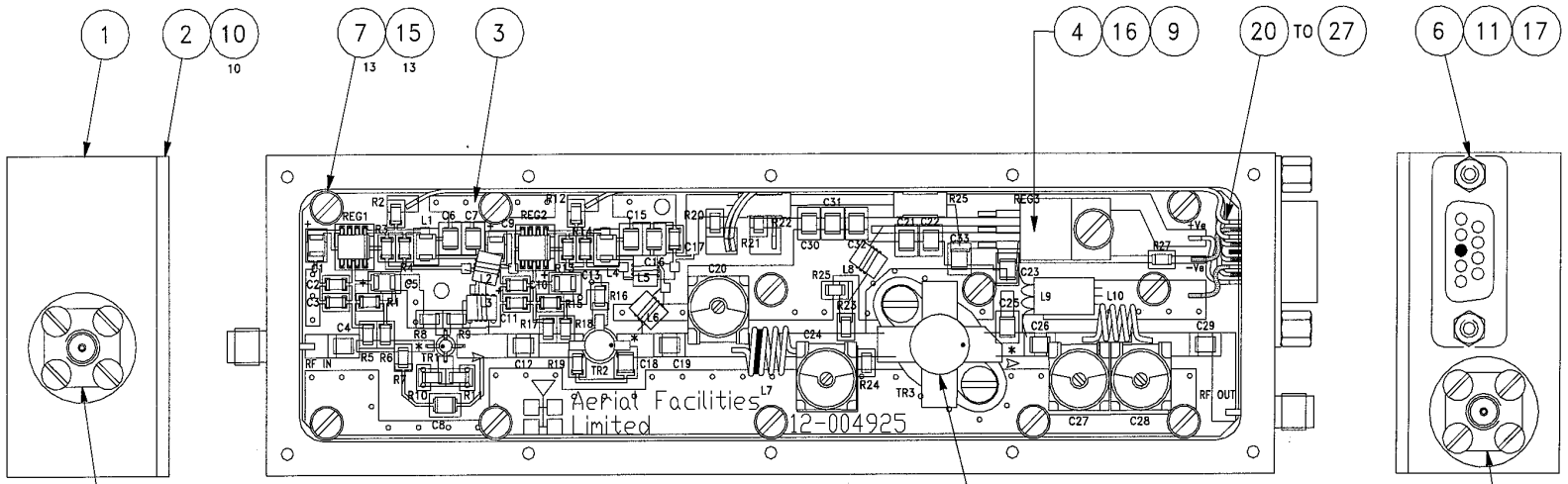

SHOWN WITH LID REMOVED

5 7
4

13 16 8 19
2 2

5 7
4

1st 2rd JOINED
TOGETHER WITH SOLDER

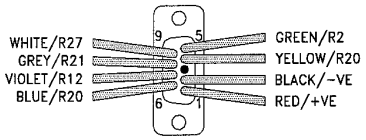

VIEW FROM REAR
'D' TYPE PLUG
SCALE 1:1

ITEMS (14) TO BE FITTED ACROSS LID/CASE JOINT IN 2 POSNS ON COMPLETION.

IDENT LABEL TO BE SUPPLIED AND COMPLETED AT TEST,FIT CENTRALLY ON LID.

ALL JOINTS TO BE MADE USING (18)

No	DESCRIPTION	DATE	BY
3A	CR1889	17/11/00	MNR
2A	CR1679	8/5/00	CCP
1A	PRODUCTION ISSUE	7/6/99	PDC

ISSUE

THIRD ANGLE PROJECTION

DRAWN	DATE
PDC	7/6/99
CHKD	APPD
PB	GB

ALL DIMENSIONS ARE IN mm UNLESS OTHERWISE STATED

THIS IS A PROPRIETARY DESIGN OF AERIAL FACILITIES LTD. REPRODUCTION OR USE OF THIS DESIGN BY OTHERS IS PERMISSIBLE ONLY IF EXPRESSLY AUTHORISED IN WRITING BY AERIAL FACILITIES LTD.

TOLERANCES
NO DECIMAL PLACE ± 1mm
ONE DECIMAL PLACE ± 0.3mm
TWO DECIMAL PLACES ± 0.1mm

SCALE
NTS

Aerial Facilities Limited
England
Tel: (01494) 777000
Fax: (01494) 777002

TITLE
VHF LOW/HIGH BAND 1 WATT CLASS A
ASSEMBLY DRAWING

CUSTOMER

DRAWING.No
12-004901

A3

USED ON
12-004911

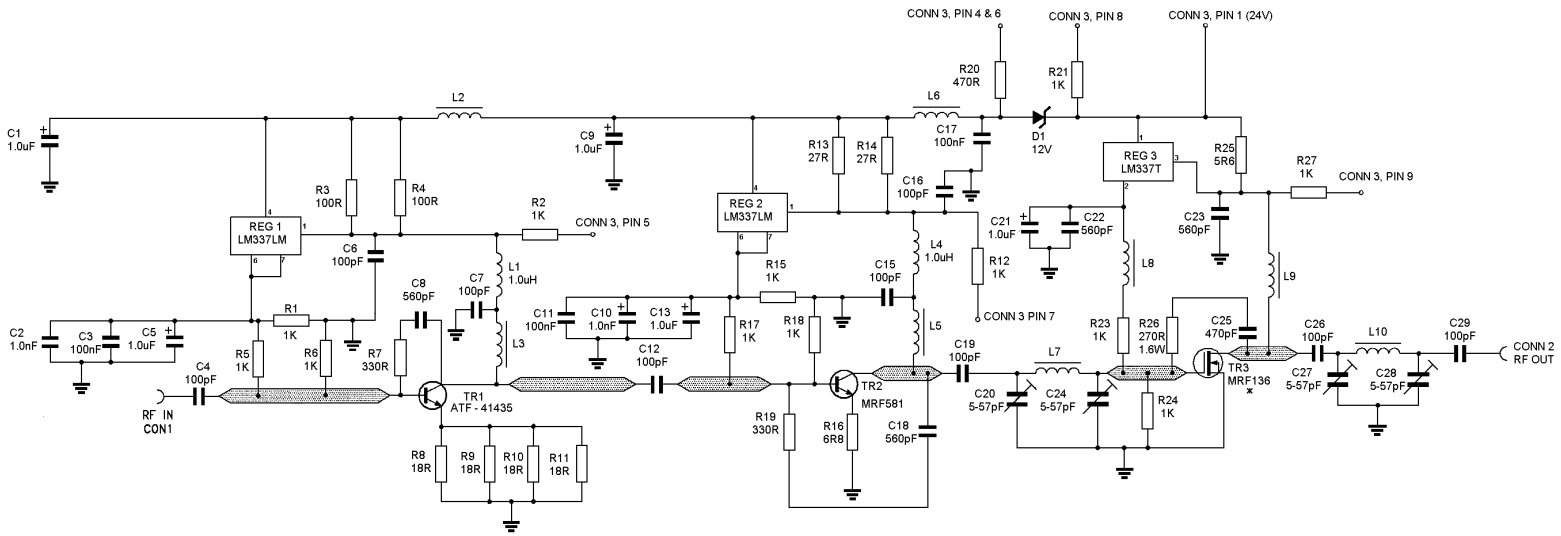

CONDUCTORS SHOWN THUS ARE 50ohm STRIPLINES
REFER TO 12-004911 FOR COMPONENT POSITIONS EXCEPT FOR THOSE
MARKED * WHICH ARE FITTED AT GA STAGE 12-004901
REFER TO COMPONENT LIST 12-004970C1 TO 12-004970C3 FOR FURTHER INFORMATION

No	DESCRIPTION	DATE	BY
2A	CR1679	8/5/00	CCP
1A	PRODUCTION ISSUE	3/6/99	PDC

ISSUE

DRAWN	DATE
PDC	3/6/99
CHKD	APPD
GB	BB

ALL DIMENSIONS ARE IN mm UNLESS OTHERWISE STATED

THIS IS A PROPRIETARY DESIGN OF AERIAL FACILITIES LTD. REPRODUCTION OR USE OF THIS DESIGN BY OTHERS IS PERMISSIBLE ONLY IF EXPRESSLY AUTHORISED IN WRITING BY AERIAL FACILITIES LTD.

TOLERANCES
NO DECIMAL PLACE ± 1mm
ONE DECIMAL PLACE ± 0.3mm
TWO DECIMAL PLACES ± 0.1mm

SCALE

Aerial Facilities Limited
England
Tel: (01494) 777000
Fax: (01494) 777002

TITLE
VHF LOW/HIGH BAND 1 WATT CLASS A
CIRCUIT DIAGRAM

CUSTOMER

DRAWING.No
12-004970

A3

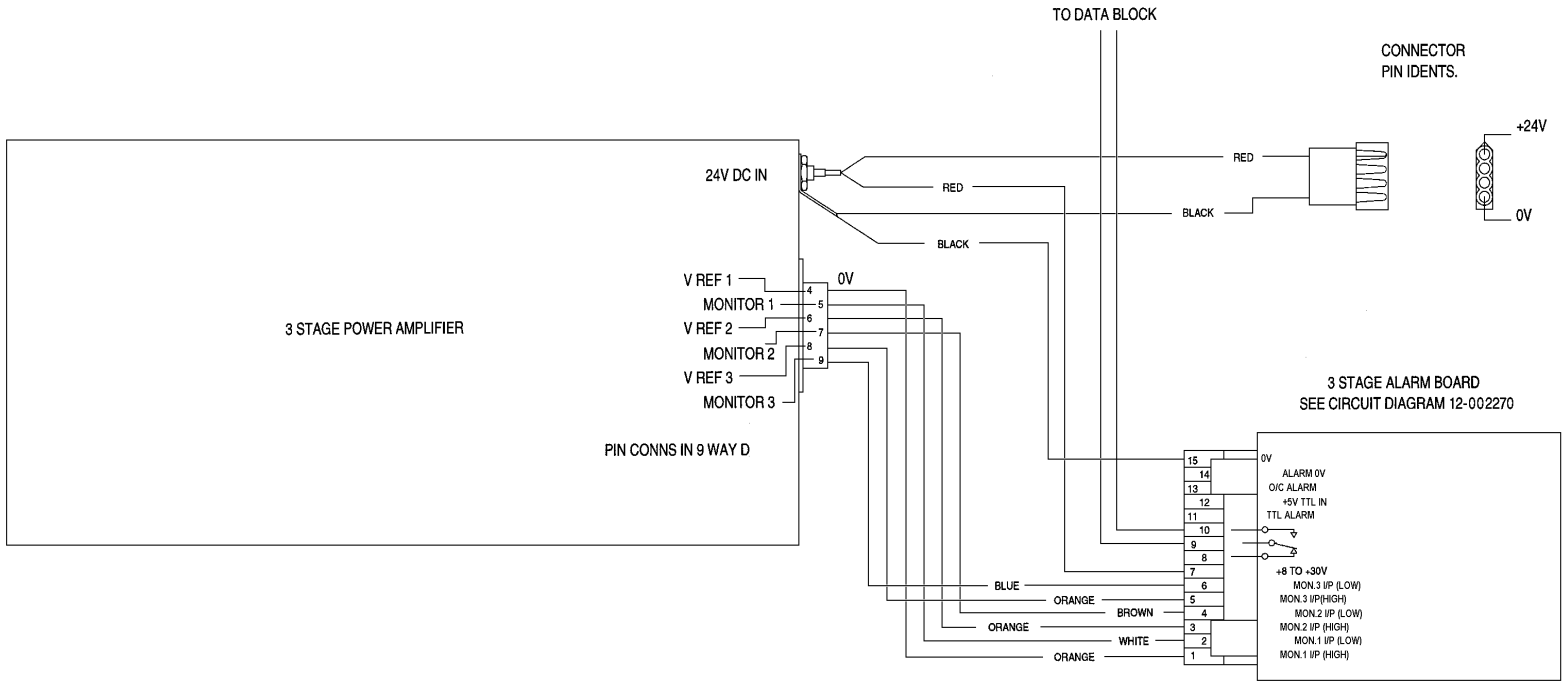

No	DESCRIPTION	DATE	BY
1A	CR0782	29/10/98	DJS
1	PRODUCTION ISSUE	22/6/98	DBS

ISSUE

DRAWN	DATE
DBS	22/6/98
CHKD	APPD
GB	JJ

ALL DIMENSIONS ARE IN mm
UNLESS OTHERWISE STATED

THIS IS A PROPRIETARY DESIGN OF AERIAL FACILITIES LTD.
REPRODUCTION OR USE OF THIS DESIGN BY OTHERS IS
PERMISSIBLE ONLY IF EXPRESSLY AUTHORISED IN WRITING
BY AERIAL FACILITIES LTD.

TOLERANCES
NO DECIMAL PLACE ± 1mm
ONE DECIMAL PLACE ± 0.3mm
TWO DECIMAL PLACES ± 0.1mm

SCALE

Aerial Facilities Ltd
England
Chesham(01494)778301
Fax (01494)778910

TITLE
3 STAGE AMPLIFIER TO ALARM
BOARD DC WIRING DETAILS

CUSTOMER
DRG.No 12-003670
ISS 1A

CIRC. REF.	AFL STOCK REF.	DESCRIPTION
R1	93-630040	1.8KR 0.125W 2% CHIP RESISTOR
R2	93-630024	120R 0.125W 2% CHIP RESISTOR
R3	93-640003	100K PRECISSION RESISTOR 0.1%
R4	93-640003	100K PRECISSION RESISTOR 0.1%
R5	93-640003	100K PRECISSION RESISTOR 0.1%
R6	93-640003	100K PRECISSION RESISTOR 0.1%
R7	93-630037	1KR 0.125W 2% CHIP RESISTOR
R8	93-630068	270KR 0.125W 2% CHIP RESISTOR
R9	93-630037	1KR 0.125W 2% CHIP RESISTOR
R10	93-630068	270KR 0.125W 2% CHIP RESISTOR
R11	93-630024	120R 0.125W 2% CHIP RESISTOR
R12	93-630047	3.6KR 0.125W 2% CHIP RESISTOR
R13	93-630049	4.7KR 0.125W 2% CHIP RESISTOR
R14	93-630045	3KR 0.125W 2% CHIP RESISTOR
R15	93-630043	2.4KR 0.125W 2% CHIP RESISTOR
R16	93-630037	1KR 0.125W 2% CHIP RESISTOR
R17	93-630042	2.2KR 0.125W 2% CHIP RESISTOR
R18	93-630057	22KR 0.125W 2% CHIP RESISTOR
R19	93-630033	560R 0.125W 2% CHIP RESISTOR
R20	93-630053	10KR 0.125W 2% CHIP RESISTOR
R21	93-630049	4.7KR 0.125W 2% CHIP RESISTOR
R22	93-630053	10KR 0.125W 2% CHIP RESISTOR
R23	93-630049	4.7KR 0.125W 2% CHIP RESISTOR
R24	93-630053	10KR 0.125W 2% CHIP RESISTOR
R25	93-630049	4.7KR 0.125W 2% CHIP RESISTOR
R26	93-630037	1KR 0.125W 2% CHIP RESISTOR
C1	93-240004	1uF TANTLUM CHIP CAP 35v S.M.D
C2	93-200021	100nF 63V 10% CHIP CAPACITOR
C3	93-200021	100nF 63V 10% CHIP CAPACITOR
C4	93-240004	1uF TANTLUM CHIP CAP 35v S.M.D
D1	94-150001	LL4148 G:P MINIMELF DIODE SMD
D2	94-150001	LL4148 G:P MINIMELF DIODE SMD
D3	94-150001	LL4148 G:P MINIMELF DIODE SMD
ZD1	94-130003	1.23V VOLTAGE REFERANCE DIODE
ZD2	94-160001	BZX84C3V3 ZENER DIODE S.M.D
LED1	96-700008	GREEN LED S.M.D
IC1	94-210001	LM324M SMD QUAD OP AMP
TR1	94-020007	BCW71 NPN TRANSISTOR S.M.D
TR2	94-020007	BCW71 NPN TRANSISTOR S.M.D
TR3	94-020007	BCW71 NPN TRANSISTOR S.M.D
TR4	94-020007	BCW71 NPN TRANSISTOR S.M.D
TR5	94-020007	BCW71 NPN TRANSISTOR S.M.D
TR6	94-020010	FZT751/753 PNP TRAN S.M.D
RL1	96-900004	6V DPCO NON LATCHING RELAY
H1	91-700016	15 WAY 0.1" LOCKING HEADER PCB

USED ON

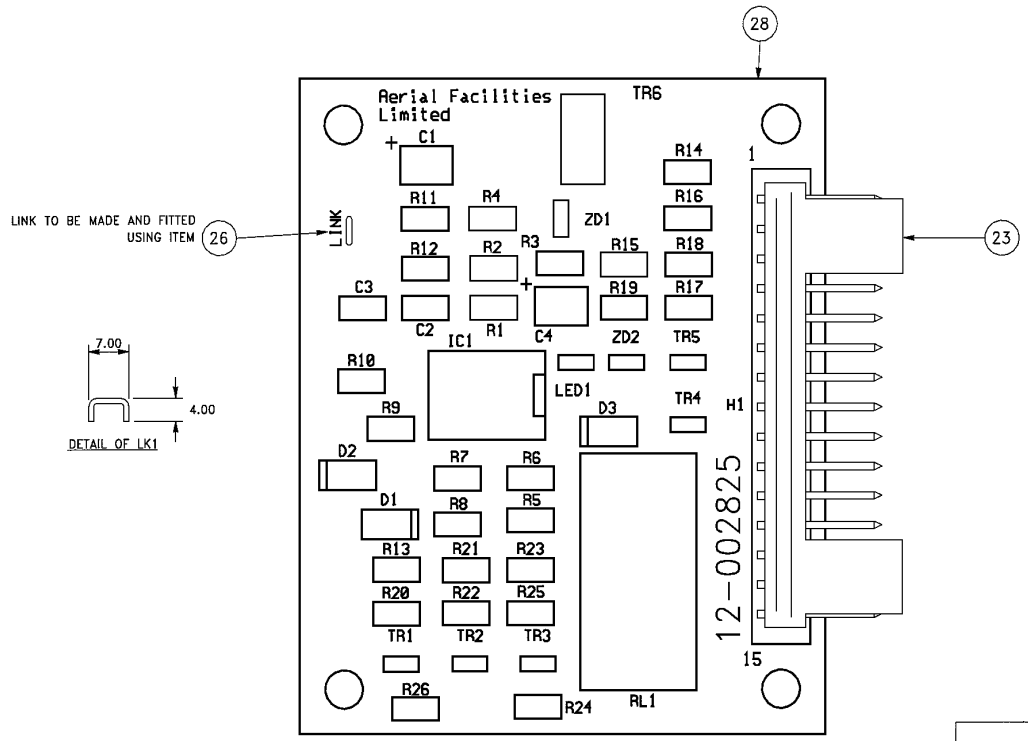

NOTES:

1. COMPONENTS SHOULD BE POSITIONED USING SILK SCREEN REFERENCES IN CONJUNCTION WITH COMPONENT LIST
2: WHERE INDIVIDUAL ITEMS ARE NOT BALLOONED THE COMPONENT IS IDENTIFIED ON BOTH THE COMPONENT LIST AND THE DRAWING BY ITS COMPONENT REF. (SEE B.o.M FOR BALLOON IDENTS)
3: ALL SOLDERING TO BE COMPLETED USING ITEM 25 (HAND SOLDERING) OR ITEM 27 (MACHINE SOLDERING)
4: USE WITH CIRCUIT DIAGRAM 12-002870

ACTUAL SIZE

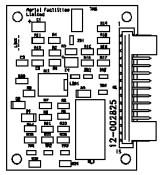

No	DESCRIPTION	DATE	
2B	CR1679	5/7/00	MNR
2A	PRODUCTION ISSUE (CR0962)	4/1/99	SEW
2	CR0622	29/9/94	MRB
1	PRODUCTION ISSUE	24/6/94	MRB

ISSUE

DRAWN	DATE
MRB	23/06/94
CHKD	APPD
GB	BB

ALL DIMENSIONS ARE IN mm UNLESS OTHERWISE STATED

THIS IS A PROPRIETARY DESIGN OF AERIAL FACILITIES LTD. REPRODUCTION OR USE OF THIS DESIGN BY OTHERS IS PERMISSIBLE ONLY IF EXPRESSLY AUTHORISED IN WRITING BY AERIAL FACILITIES LTD.

TOLERANCES
NO DECIMAL PLACE ± 1mm
ONE DECIMAL PLACE ± 0.3mm
TWO DECIMAL PLACES ± 0.1mm

SCALE 4:1

Aerial Facilities Ltd
England
Tel : (01494)777000
Fax : (01494)777002

TITLE SINGLE CHANNEL ALARM PCB

CUSTOMER

DRG.No 12-002801

ISS 1A

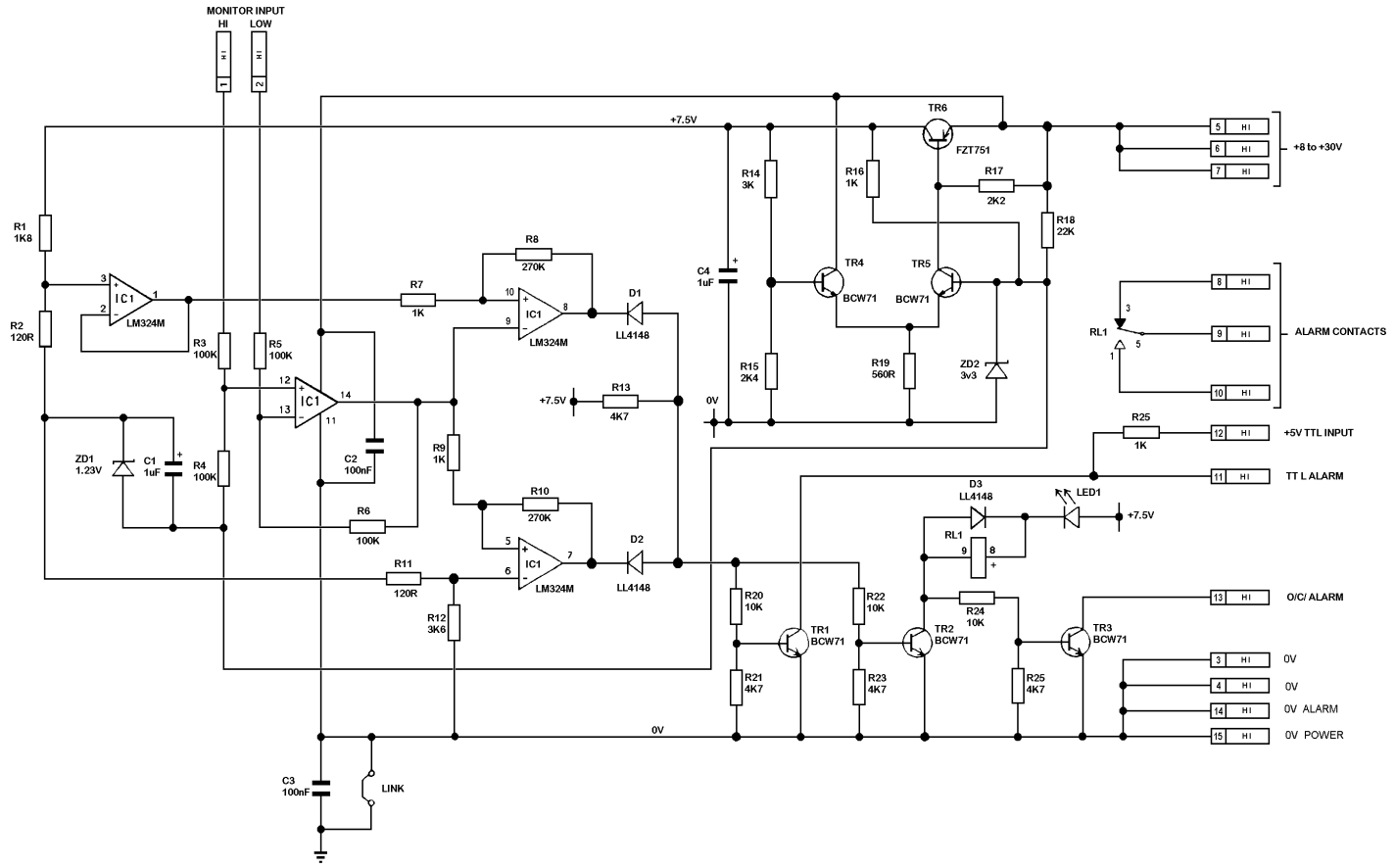

2	CH0622	29/9/94	MRB		
1	PRODUCTION ISSUE	5/5/94	MRB		
No	DESCRIPTION	D'	BY		
	ISSUE				

DRAWN: MRB — DATE: 5/5/94

CHKD — APPD

ALL DIMENSIONS ARE IN mm UNLESS OTHERWISE STATED

THIS IS A PROPRIETY DESIGN OF AERIAL FACILITIES LTD REPRODUCTION OR USE OF THIS DESIGN BY OTHERS IS PERMISSIBLE ONLY IF EXPRESSLY AUTHORISED IN WRITING BY AERIAL FACILITIES LTD

TOLERANCES
NO DECIMAL PLACE ± 1mm
ONE DECIMAL PLACE ± 0.3mm
TWO DECIMAL PLACES ± 0.1mm

SCALE

Aerial Facilities Ltd.
England
Tel: 01494 777000
Fax: 01494 777002

TITLE:
SINGLE CHANNEL ALARM PCB
CIRCUIT DIAGRAM

CUSTOMER

DRG No. 12-002870

Iss. 2

CIRC. REF.	AFL STOCK REF.	DESCRIPTION
R1	93-630040	1.8KR 0.125W 2% CHIP RESISTOR
R2	93-630024	120R 0.125W 2% CHIP RESISTOR
R3	93-630024	120R 0.125W 2% CHIP RESISTOR
R4	93-630047	3.6KR 0.125W 2% CHIP RESISTOR
R5	93-640003	100K PRECISION RESISTOR 0.1%
R6	93-640003	100K PRECISION RESISTOR 0.1%
R7	93-640003	100K PRECISION RESISTOR 0.1%
R8	93-640003	100K PRECISION RESISTOR 0.1%
R9	93-630037	1KR 0.125W 2% CHIP RESISTOR
R10	93-630068	270KR 0.125W 2% CHIP RESISTOR
R11	93-630037	1KR 0.125W 2% CHIP RESISTOR
R12	93-630068	270KR 0.125W 2% CHIP RESISTOR
R13	93-640003	100K PRECISION RESISTOR 0.1%
R14	93-640003	100K PRECISION RESISTOR 0.1%
R15	93-640003	100K PRECISION RESISTOR 0.1%
R16	93-640003	100K PRECISION RESISTOR 0.1%
R17	93-630037	1KR 0.125W 2% CHIP RESISTOR
R18	93-630068	270KR 0.125W 2% CHIP RESISTOR
R19	93-630037	1KR 0.125W 2% CHIP RESISTOR
R20	93-630068	270KR 0.125W 2% CHIP RESISTOR
R21	93-640003	100K PRECISION RESISTOR 0.1%
R22	93-640003	100K PRECISION RESISTOR 0.1%
R23	93-640003	100K PRECISION RESISTOR 0.1%
R24	93-640003	100K PRECISION RESISTOR 0.1%
R25	93-630037	1KR 0.125W 2% CHIP RESISTOR
R26	93-630068	270KR 0.125W 2% CHIP RESISTOR
R27	93-630037	1KR 0.125W 2% CHIP RESISTOR
R28	93-630068	270KR 0.125W 2% CHIP RESISTOR
R29	93-630049	4.7KR 0.125W 2% CHIP RESISTOR
R30	93-630042	2.2KR 0.125W 2% CHIP RESISTOR
R31	93-630053	10KR 0.125W 2% CHIP RESISTOR
R32	93-630049	4.7KR 0.125W 2% CHIP RESISTOR
R33	93-630053	10KR 0.125W 2% CHIP RESISTOR
R34	93-630049	4.7KR 0.125W 2% CHIP RESISTOR
R35	93-630037	1KR 0.125W 2% CHIP RESISTOR
R36	93-630045	3KR 0.125W 2% CHIP RESISTOR
R37	93-630043	2.4KR 0.125W 2% CHIP RESISTOR
R38	93-630037	1KR 0.125W 2% CHIP RESISTOR
R39	93-630033	560R 0.125W 2% CHIP RESISTOR
R40	93-630042	2.2KR 0.125W 2% CHIP RESISTOR
R41	93-630057	22KR 0.125W 2% CHIP RESISTOR
R42	93-630049	4.7KR 0.125W 2% CHIP RESISTOR
C1	93-240004	1uF TANTALUM CHIP CAP 35v SMD
C2	93-200021	100nF 63V 10% CHIP CAPACITOR
C3	93-200021	100nF 63V 10% CHIP CAPACITOR
C4	93-200021	100nF 63V 10% CHIP CAPACITOR
C5		
C6	93-200021	100nF 63V 10% CHIP CAPACITOR
C7	93-240004	1uF TANTALUM CHIP CAP 35v SMD
C8	93-240004	1uF TANTALUM CHIP CAP 35v SMD
D1	94-130003	1.23v VOLTAGE REFERENCE DIODE
D2	94-150001	LL4148 G:P MINIMELF DIODE SMD
D3	94-150001	LL4148 G:P MINIMELF DIODE SMD
D4	94-150001	LL4148 G:P MINIMELF DIODE SMD
D5	94-150001	LL4148 G:P MINIMELF DIODE SMD
D6	94-150001	LL4148 G:P MINIMELF DIODE SMD
D7	94-150001	LL4148 G:P MINIMELF DIODE SMD
D8	94-150001	LL4148 G:P MINIMELF DIODE SMD
D9	94-150001	BZX84C3V3 ZENER DIODE SMD
LED1	96-700008	GREEN LED SMD
TR1	94-020007	BCW71 NPN TRANSISTOR SMD
TR1	94-020007	BCW71 NPN TRANSISTOR SMD
TR1	94-020007	BCW71 NPN TRANSISTOR SMD

CIRC. REF.	AFL STOCK REF.	DESCRIPTION
TR4	94-020007	BCW71 NPN TRANSISTOR SMD
TR5	94-020007	BCW71 NPN TRANSISTOR SMD
TR6	94-020010	FZT751/753 PNP TRAN SMD
IC1	94-210001	LM324M SMD QUAD OP AMP
IC2	94-210001	LM324M SMD QUAD OP AMP
IC3	94-210001	LM324M SMD QUAD OP AMP
RL1	96-900004	6V DPCO NON LATCHING RELAY
H1	91-700016	15 WAY 0.1" LOCKING HEADER PCB

USED ON

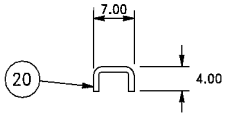

DETAIL OF LK1/LK2

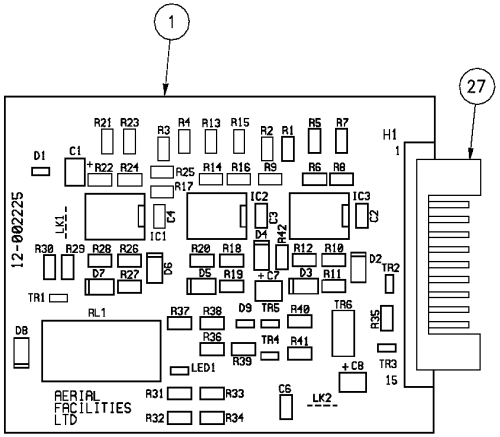

NOTES:

1. COMPONENTS SHOULD BE POSITIONED USING SILK SCREEN REFERENCES IN CONJUNCTION WITH COMPONENT LIST
2: WHERE INDIVIDUAL ITEMS ARE NOT BALLOONED THE COMPONENT IS IDENTIFIED ON BOTH THE COMPONENT LIST AND THE DRAWING BY ITS COMPONENT REF. (SEE B.o.M FOR BALLOON IDENTS)
3: ALL SOLDERING TO BE COMPLETED USING ITEM (27) (HAND SOLDERING) OR ITEM (28) (MACHINE SOLDERING)
4: USE WITH CIRCUIT DIAGRAM 12-002270

No	DESCRIPTION	DATE	
2A	CR1679	28/6/00	DBS
1A	PRODUCTION ISSUE (CR0962)	4/1/99	SEW
1	PRODUCTION ISSUE(CR0596)	15/6/94	MRB

ISSUE

DRAWN: MRB — DATE: 14/6/94
CHKD: GB — APPD: BB

ALL DIMENSIONS ARE IN mm UNLESS OTHERWISE STATED

THIS IS A PROPRIETARY DESIGN OF AERIAL FACILITIES LTD. REPRODUCTION OR USE OF THIS DESIGN BY OTHERS IS PERMISSIBLE ONLY IF EXPRESSLY AUTHORISED IN WRITING BY AERIAL FACILITIES LTD.

TOLERANCES
NO DECIMAL PLACE ± 1mm
ONE DECIMAL PLACE ± 0.3mm
TWO DECIMAL PLACES ± 0.1mm

SCALE: 2:1

Aerial Facilities Ltd
England
Tel: (01494) 777000
Fax (01494) 777002

TITLE: 3 STAGE AMPLIFIER ALARM BOARD ASSEMBLY

CUSTOMER

DRG.No: 12-002201

ISS: 2A

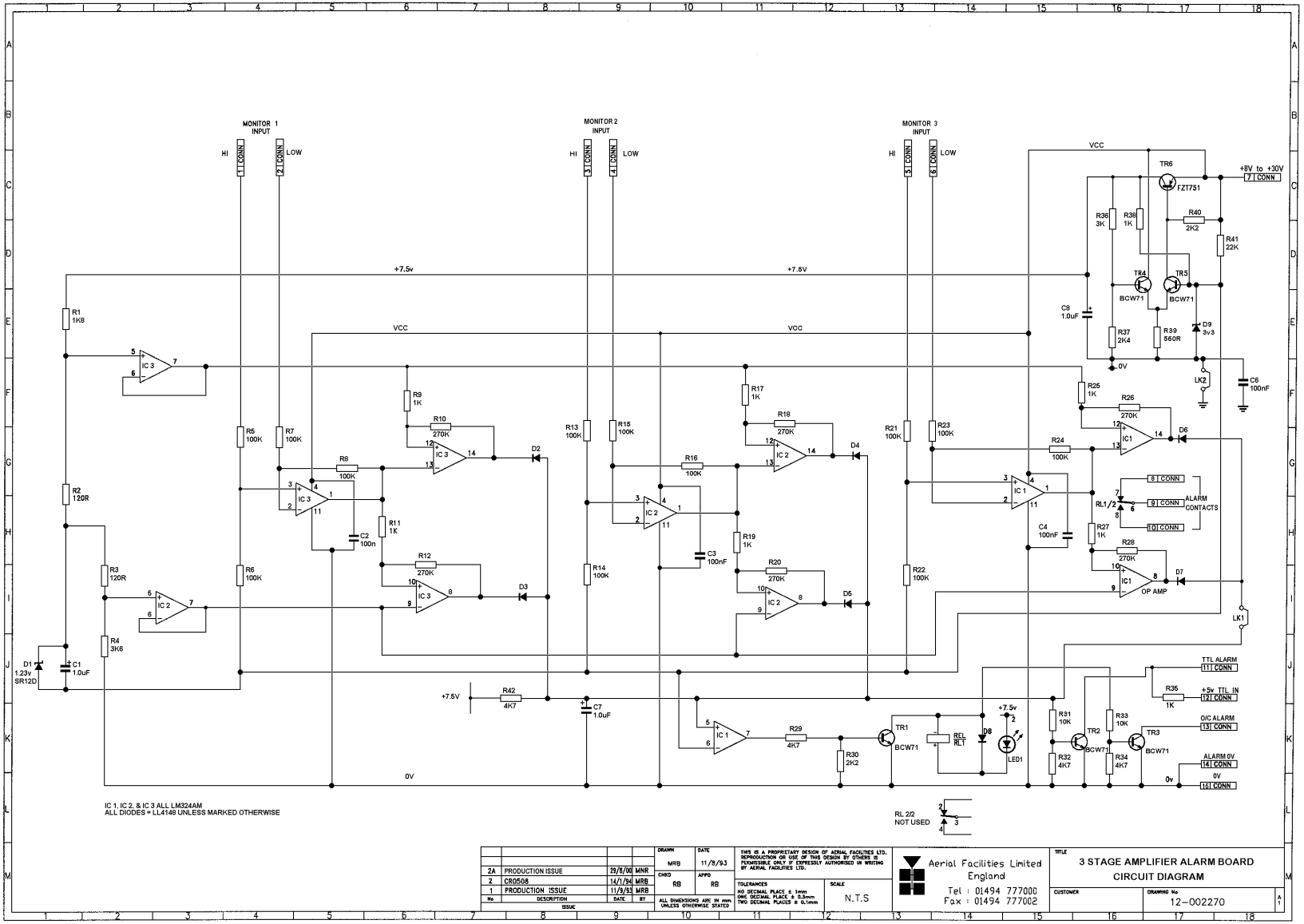

IC 1, IC 2, & IC 3 ALL LM324AM
ALL DIODES = LL4148 UNLESS MARKED OTHERWISE

No	DESCRIPTION	DATE	BY
2A	PRODUCTION ISSUE	29/8/00	MNR
2	CR0508	14/1/94	MRB
1	PRODUCTION ISSUE	11/9/93	MRB

ISSUE

DRAWN MRB — DATE 11/8/93
CHKD RB — APPD RB

ALL DIMENSIONS ARE IN mm UNLESS OTHERWISE STATED

THIS IS A PROPRIETARY DESIGN OF AERIAL FACILITIES LTD. REPRODUCTION OR USE OF THIS DESIGN BY OTHERS IS PERMISSIBLE ONLY IF EXPRESSLY AUTHORISED IN WRITING BY AERIAL FACILITIES LTD.

TOLERANCES
NO DECIMAL PLACE ± 1mm
ONE DECIMAL PLACE ± 0.3mm
TWO DECIMAL PLACES ± 0.1mm

SCALE N.T.S

Aerial Facilities Limited
England
Tel : 01494 777000
Fax : 01494 777002

TITLE
3 STAGE AMPLIFIER ALARM BOARD CIRCUIT DIAGRAM

CUSTOMER

DRAWING No 12-002270

A 1

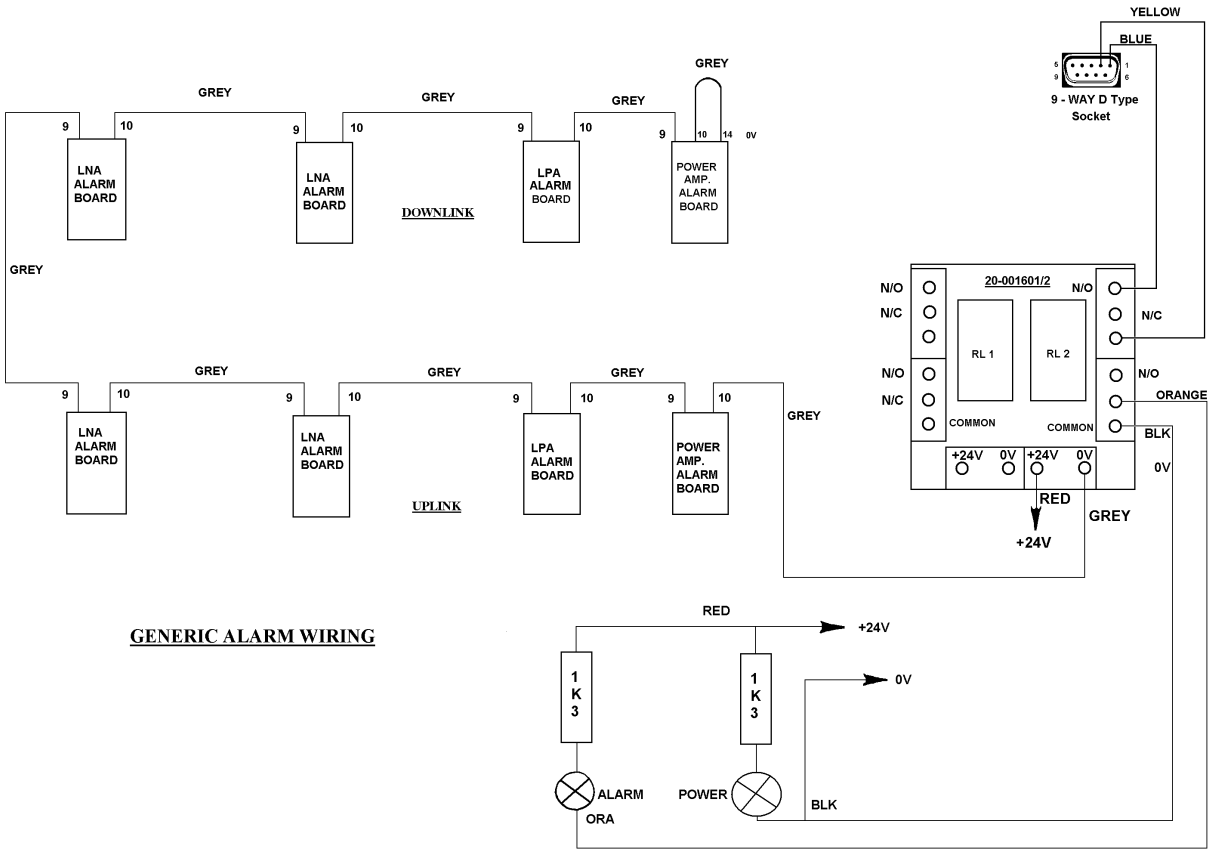

GENERIC ALARM WIRING

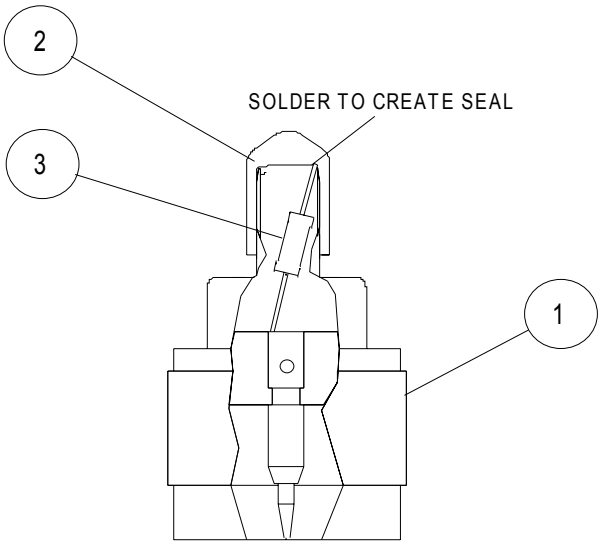

COMPLETE ALL SOLDERING OF ITEM 3 USING ITEM 4

No	DESCRIPTION	DATE	BY
A	ORIGINAL ISSUE	19/5/99	PDC

ISSUE

THIRD ANGLE PROJECTION

THIS IS A PROPRIETARY DESIGN OF AERIAL FACILITIES LTD. REPRODUCTION OR USE OF THIS DESIGN BY OTHERS IS PERMISSIBLE ONLY IF EXPRESSLY AUTHORISED IN WRITING BY AERIAL FACILITIES LTD.

Aerial Facilities Limited

TOLERANCES
NO DECIMAL PLACE ± 1mm
ONE DECIMAL PLACE ± 0.3mm
TWO DECIMAL PLACES ± 0.1mm

ALL DIMENSIONS ARE IN mm UNLESS OTHERWISE STATED

TITLE
0.25W DUMMY LOAD, N-TYPE
ASSEMBLY DRAWING

DRAWN	DATE	CHKD	APPD	SCALE	CUSTOMER	DRAWING No	A4
PDC	19/5/99			2:1		80-024701	

USED ON

THIRD ANGLE PROJECTION

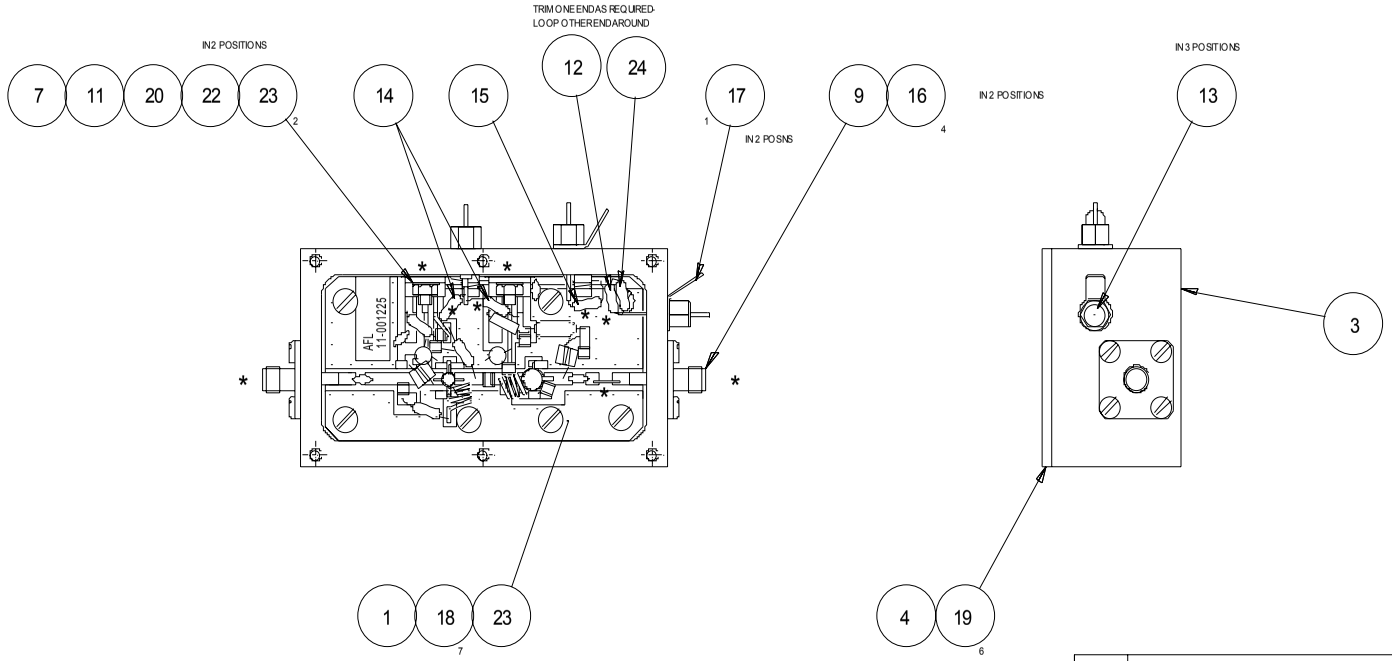

NOTES:

1. UNIT WEIGHT = .26kg
2. COMPLETE INSTALLATION OF ITEMS MARKED USING ITEM *

26

No	DESCRIPTION	DATE	BY
2A	CR1767	15/8/00	MNR
1A	CR1679	18/4/00	DBS

ISSUE

DRAWN	DATE
DBS	18/4/00
CHKD	APPD
JD	BB

ALL DIMENSIONS ARE IN mm
UNLESS OTHERWISE STATED

THIS IS A PROPRIETARY DESIGN OF AERIAL FACILITIES LTD.
REPRODUCTION OR USE OF THIS DESIGN BY OTHERS IS
PERMISSIBLE ONLY IF EXPRESSLY AUTHORISED IN WRITING
BY AERIAL FACILITIES LTD.

TOLERANCES
NO DECIMAL PLACE ± 1mm
ONE DECIMAL PLACE ± 0.3mm
TWO DECIMAL PLACES ± 0.1mm

SCALE
1:1

Aerial Facilities Ltd
England

Tel: (01494)777000
Fax: (01494)777002

TITLE
LOW NOISE AMPLIFIER (24V/SMA/ALARMS)

GENERAL ASSEMBLY

CUSTOMER DRG.No 11-001202 ISS 2A

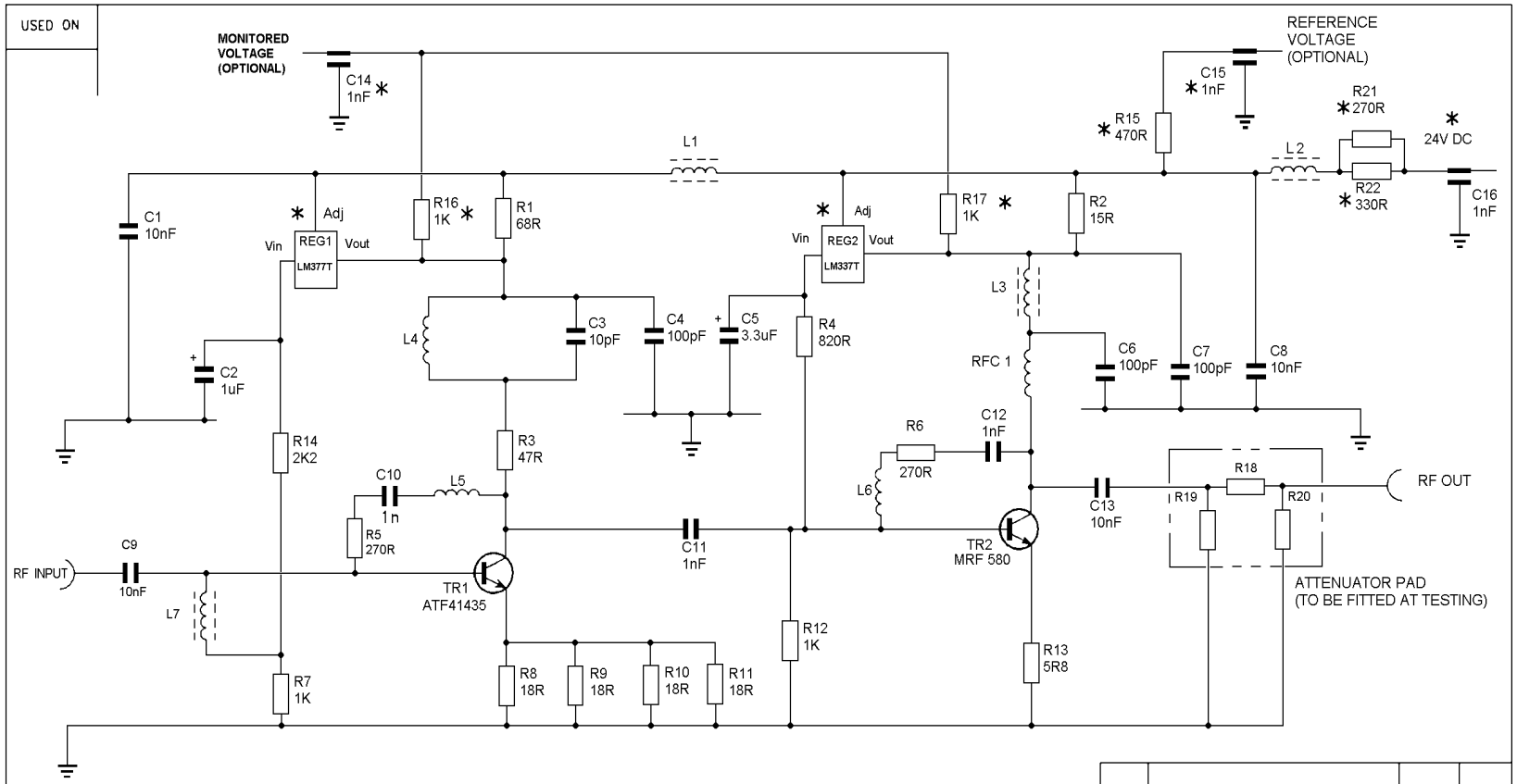

REFER TO THE COMPONENT LIST 11-001270C1 & C2 FOR FURTHER INFORMATION.
POSITIONS OF COMPONENTS ARE SHOWN ON PCB ASSEMBLY 11-001211
EXCEPT FOR THOSE MARKED * WHICH ARE SHOWN ON G.A.

No	DESCRIPTION	DATE	BY
5B	CR1767	28/7/00	MNR
5A	CR1679	18/4/00	DBS
4A	PRODUCTION ISSUE (CR0962)	20/1/99	SEW
2	CR0450	10/6/93	DJL

ISSUE

DRAWN	DATE
DBS	28/9/90
CHKD	APPD
JD	BB

ALL DIMENSIONS ARE IN mm UNLESS OTHERWISE STATED

THIS IS A PROPRIETARY DESIGN OF AERIAL FACILITIES LTD. REPRODUCTION OR USE OF THIS DESIGN BY OTHERS IS PERMISSIBLE ONLY IF EXPRESSLY AUTHORISED IN WRITING BY AERIAL FACILITIES LTD.

TOLERANCES
NO DECIMAL PLACE ± 1mm
ONE DECIMAL PLACE ± 0.3mm
TWO DECIMAL PLACES ± 0.1mm

SCALE

Aerial Facilities Ltd
England
Tel: (01494) 777000
Fax: (01494) 777002

TITLE
VHF/UHF (24V) LOW NOISE AMPLIFIER
CIRCUIT DIAGRAM

CUSTOMER

DRG.No 11-001270

ISS 5A

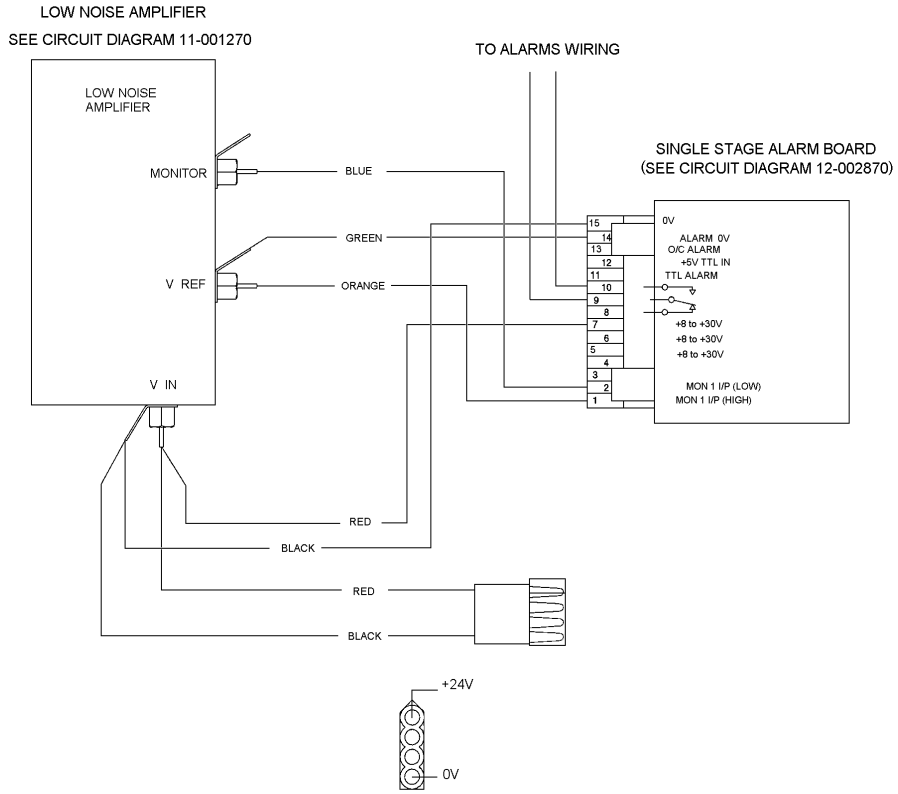

CONNECTOR PIN DETAILS

No	DESCRIPTION	DATE	BY
1B	CR1679	14/7/00	DBS
1A	ORIGINAL ISSUE	16/4/98	DBS

ISSUE

DRAWN	DATE
DBS	16/4/98
CHKD	APPD
GB	BB

ALL DIMENSIONS ARE IN mm
UNLESS OTHERWISE STATED

THIS IS A PROPRIETARY DESIGN OF AERIAL FACILITIES LTD.
REPRODUCTION OR USE OF THIS DESIGN BY OTHERS IS
PERMISSIBLE ONLY IF EXPRESSLY AUTHORISED IN WRITING
BY AERIAL FACILITIES LTD.

TOLERANCES
NO DECIMAL PLACE ± 1mm
ONE DECIMAL PLACE ± 0.3mm
TWO DECIMAL PLACES ± 0.1mm

SCALE

Aerial Facilities Limited
England
Tel: (01494)777000
Fax: (01494)777002

TITLE
LOW NOISE AMPLIFIER TO
ALARM BOARD. DC WIRING DETAILS

CUSTOMER
DRAWING.No
11-001250
A 3

STAGE 1

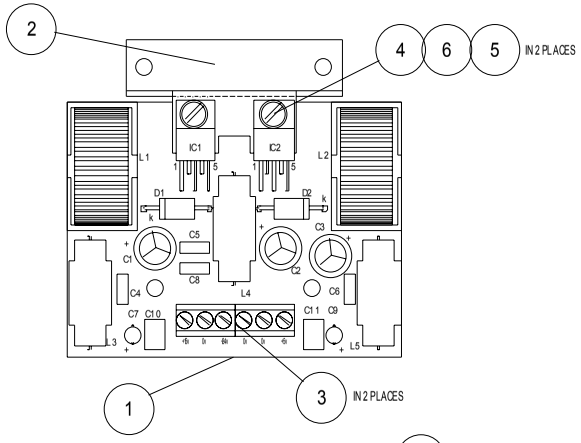

ALL SOLDER JOINTS TO BE MADE USING 16 .

STAGE 2

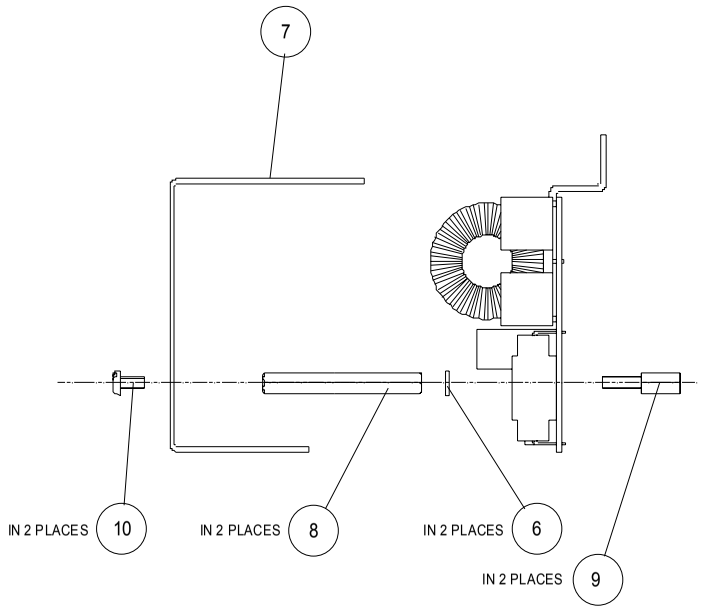

No	DESCRIPTION	DATE	BY
1A	PRODUCTION ISSUE	07/03/02	MNR

ISSUE

DRAWN	DATE
MNR	07/03/02
CHKD GB	APPD BB

ALL DIMENSIONS ARE IN mm
UNLESS OTHERWISE STATED

THIS IS A PROPRIETARY DESIGN OF AERIAL FACILITIES LTD.
REPRODUCTION OR USE OF THIS DESIGN BY OTHERS IS
PERMISSIBLE ONLY IF EXPRESSLY AUTHORISED IN WRITING
BY AERIAL FACILITIES LTD.

TOLERANCES
NO DECIMAL PLACE ± 1mm
ONE DECIMAL PLACE ± 0.3mm
TWO DECIMAL PLACES ± 0.1mm

SCALE
1:1

Aerial Facilities Limited
England
Tel : 01494 777000
Fax : 01494 777002

TITLE
DUAL DC-DC CONVERTER(24V-12V/12V)
PCB SUB-ASSEMBLY

CUSTOMER
DRAWING No
13-001803
A3

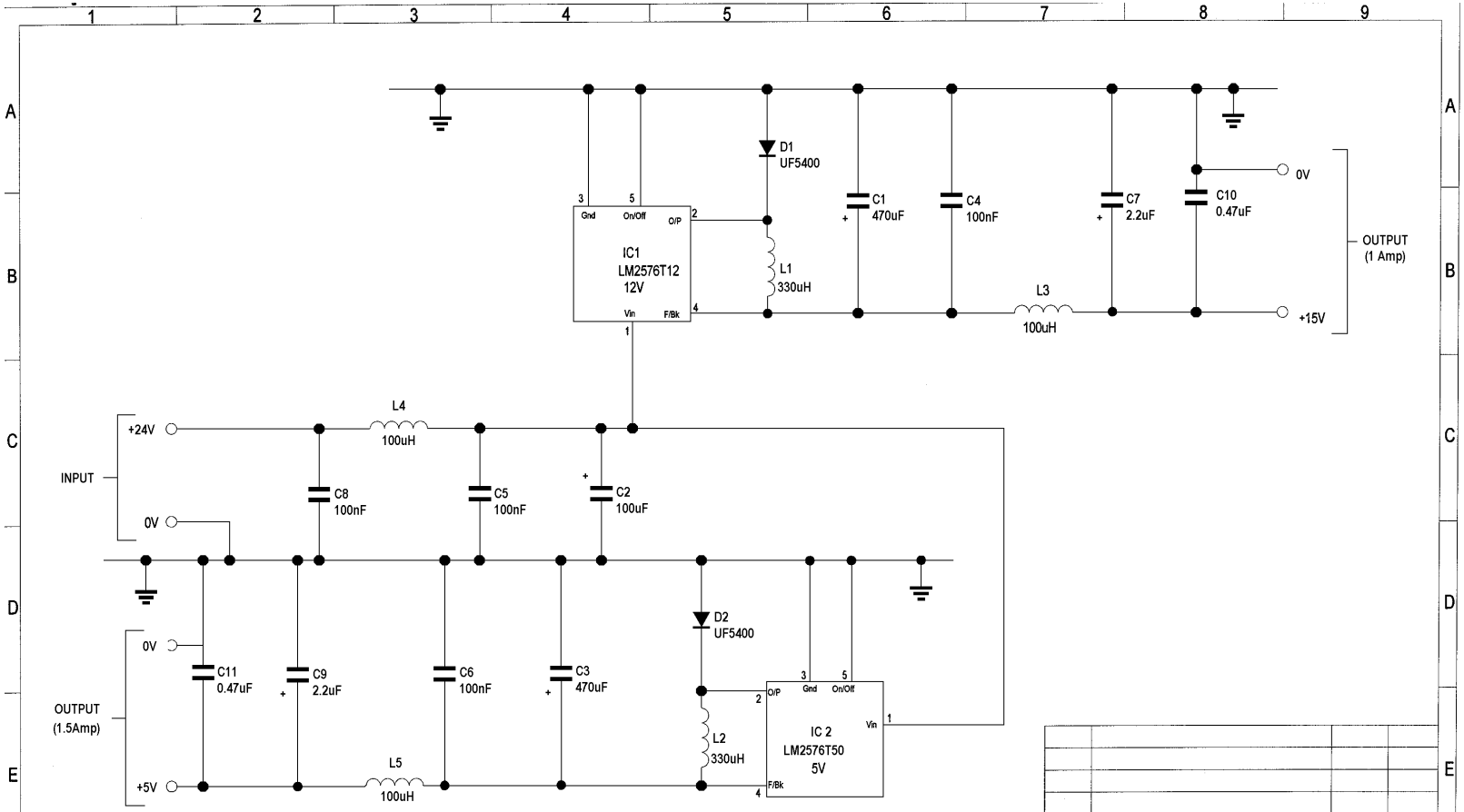

No	DESCRIPTION	DATE	BY
1A	PRODUCTION ISSUE	11/03/02	MNR

ISSUE

USE IN CONJUNCTION WITH ASSEMBLY DRAWING 13-001802

DRAWN	DATE
MNR	11/03/02
CHKD GB	APPD BB

ALL DIMENSIONS ARE IN mm UNLESS OTHERWISE STATED

THIS IS A PROPRIETARY DESIGN OF AERIAL FACILITIES LTD. REPRODUCTION OR USE OF THIS DESIGN BY OTHERS IS PERMISSIBLE ONLY IF EXPRESSLY AUTHORISED IN WRITING BY AERIAL FACILITIES LTD.

TOLERANCES
NO DECIMAL PLACE ± 1mm
ONE DECIMAL PLACE ± 0.3mm
TWO DECIMAL PLACES ± 0.1mm

SCALE
N.T.S

Aerial Facilities Limited
England
Tel : 01494 777000
Fax : 01494 777002

TITLE
DUAL DC-DC CONVERTOR (24V-12V/5V)
CIRCUIT DIAGRAM

CUSTOMER
DRAWING.No 13-001871
A3

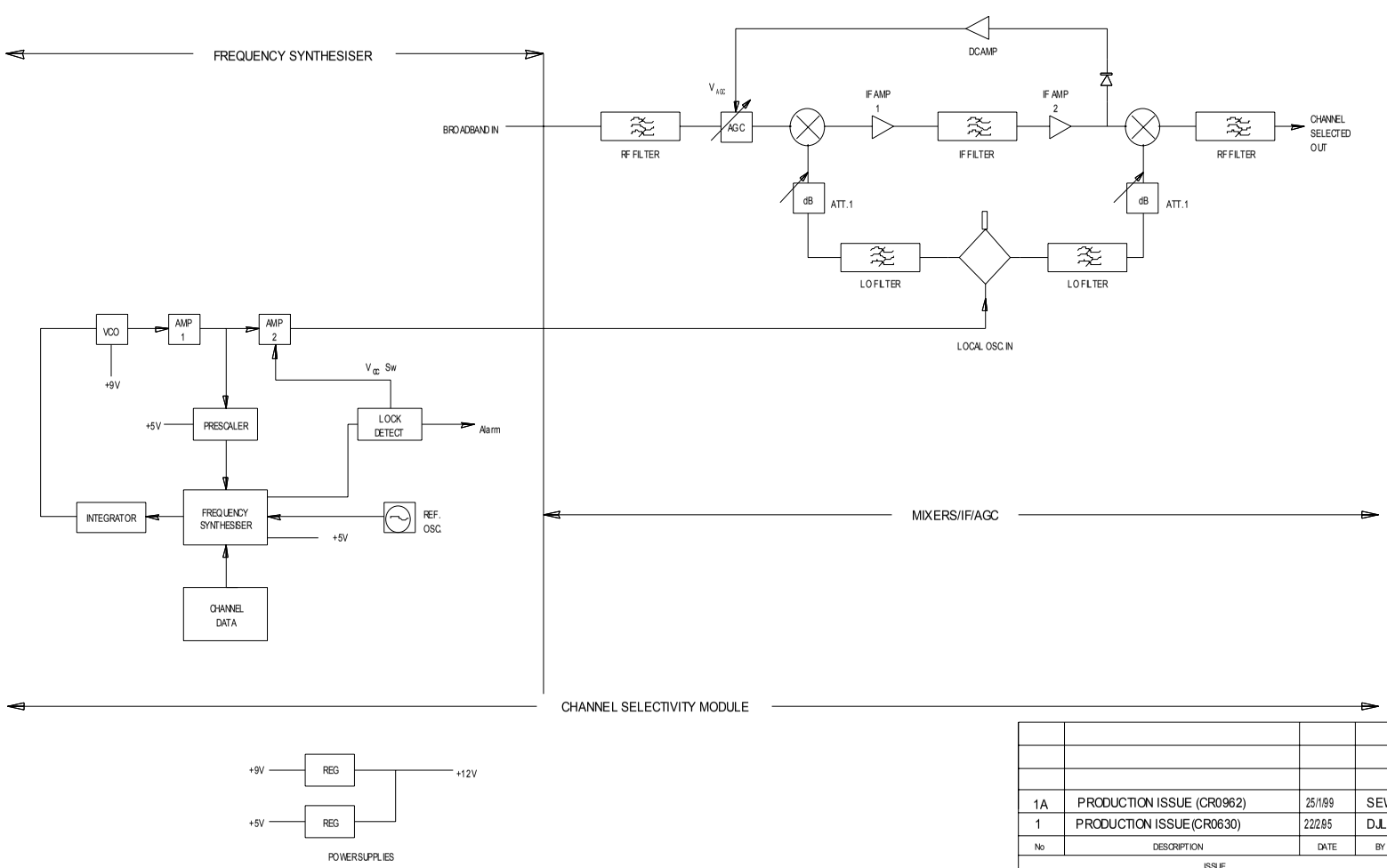

No	DESCRIPTION	DATE	BY
1A	PRODUCTION ISSUE (CR0962)	25/1/99	SEW
1	PRODUCTION ISSUE (CR0630)	22/2/95	DJL

ISSUE

DRAWN	DATE
DJL	22/02/95
CHKD	APPD

ALL DIMENSIONS ARE IN mm UNLESS OTHERWISE STATED

THIS IS A PROPRIETARY DESIGN OF AERIAL FACILITIES LTD. REPRODUCTION OR USE OF THIS DESIGN BY OTHERS IS PERMISSIBLE ONLY IF EXPRESSLY AUTHORISED IN WRITING BY AERIAL FACILITIES LTD.

TOLERANCES
NO DECIMAL PLACE ± 1mm
ONE DECIMAL PLACE ± 0.3mm
TWO DECIMAL PLACES ± 0.1mm

SCALE

Aerial Facilities Ltd
England
Chesham (0494) 778301
Fax (0494) 778910

TITLE
CCE, CHANNEL SELECTIVITY MODULE, SYSTEM DIAGRAM

CUSTOMER | DRG.No | 17-003080 | ISS 1A | A3

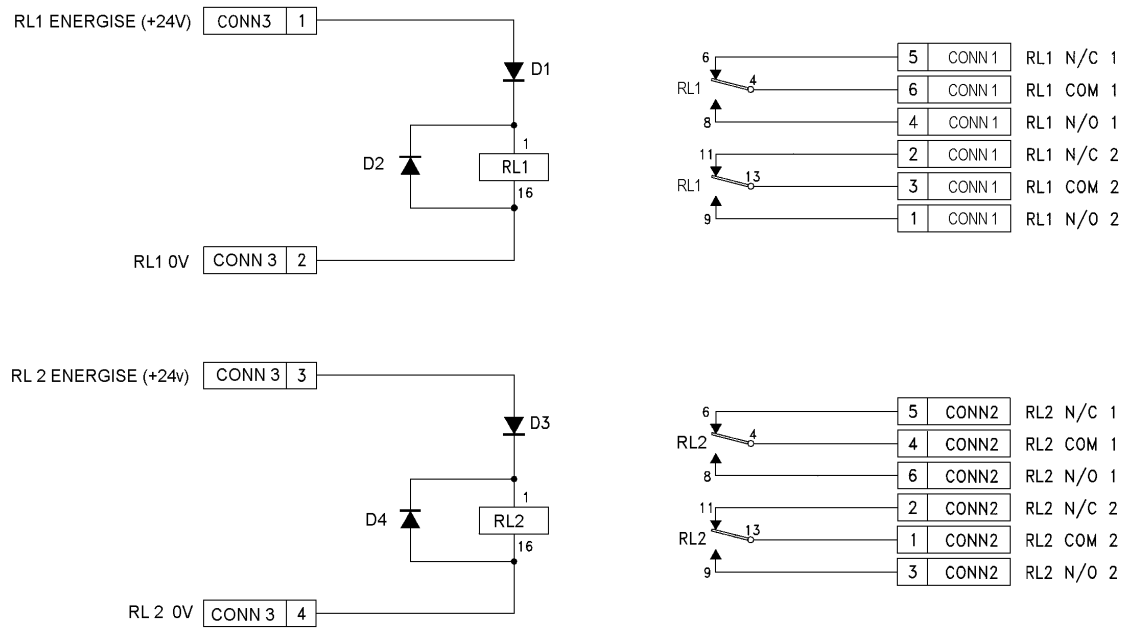

No	DESCRIPTION	DATE	BY
1A	PRODUCTION ISSUE (CR1679)	15/6/00	DBS

ISSUE

DRAWN	DATE
DBS	15/6/00
CHKD	APPD
GB	BB

ALL DIMENSIONS ARE IN mm UNLESS OTHERWISE STATED

THIS IS A PROPRIETARY DESIGN OF AERIAL FACILITIES LTD. REPRODUCTION OR USE OF THIS DESIGN BY OTHERS IS PERMISSIBLE ONLY IF EXPRESSLY AUTHORISED IN WRITING BY AERIAL FACILITIES LTD.

TOLERANCES
NO DECIMAL PLACE ± 1mm
ONE DECIMAL PLACE ± 0.3mm
TWO DECIMAL PLACES ± 0.1mm

SCALE 1.1

Aerial Facilities Limited
England
Tel : 01494 777000
Fax : 01494 777002

TITLE
RELAY PCB CIRCUIT DIAGRAM

CUSTOMER

DRAWING.No 20-001671

A3

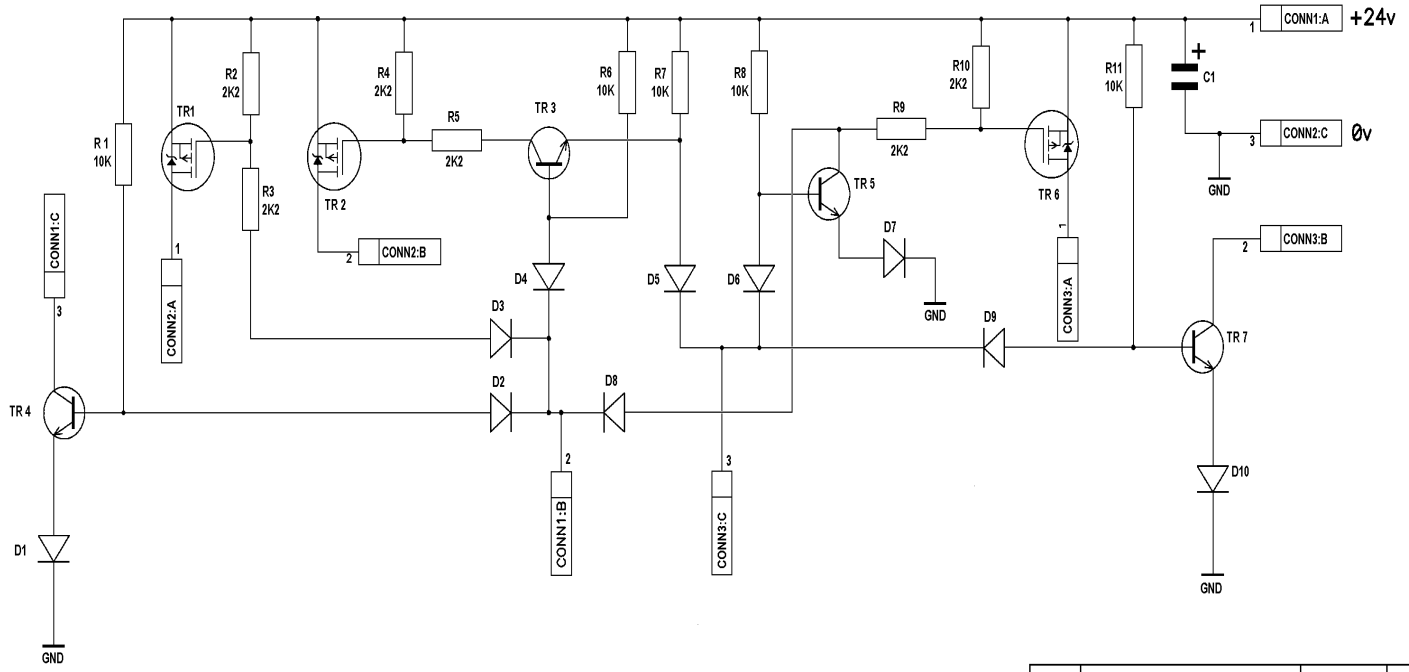

No	DESCRIPTION	DATE	BY
1A	PRODUCTION ISSUE	20/12/00	MRB

ISSUE

DRAWN	DATE
MRB	20/12/00
CHKD	APPD
GD	MRB

ALL DIMENSIONS ARE IN mm UNLESS OTHERWISE STATED

THIS IS A PROPRIETY DESIGN OF AERIAL FACILITIES LTD REPRODUCTION OR USE OF THIS DESIGN BY OTHERS IS PERMISSIBLE ONLY IF EXPRESSLY AUTHORISED IN WRITING BY AERIAL FACILITIES LTD

TOLERANCES
NO DECIMAL PLACE : ± 0.040"
ONE DECIMAL PLACE : ± 0.010"
TWO DECIMAL PLACES : ± 0.005"

SCALE

Aerial Facilities Ltd
England
Chesham(01494)778301
Fax (01494)778910

TITLE
SIMPLEX CONTROLLER PCB CIRCUIT DIAGRAM

CUSTOMER

DRG.No 13-002870

ISS. 1A

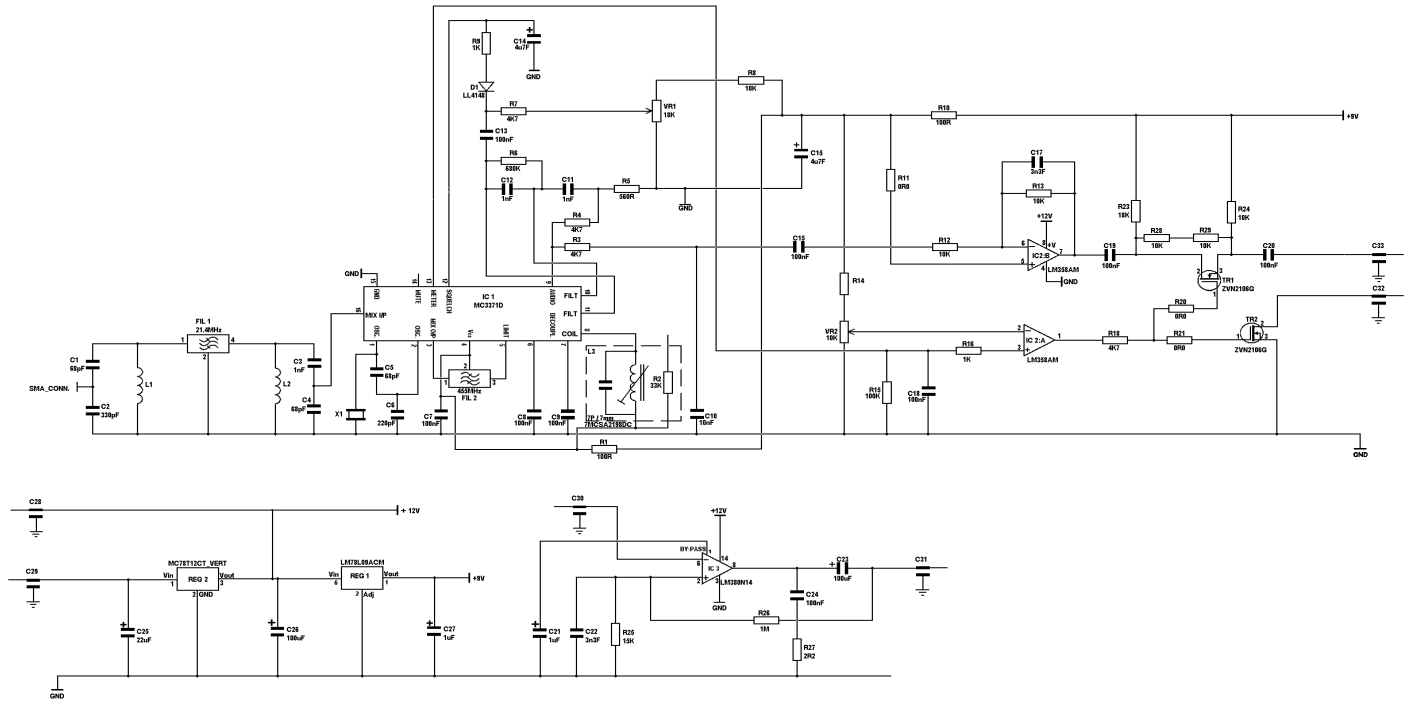

				DRAWN PDC	DATE 14/6/99
				CHKD PDC	APPD JD
1A	PRODUCTION ISSUE	5/4/01	MPB		
AA	ORIGINAL ISSUE	14/6/99	PDC		
No	DESCRIPTION	DATE	BY		
	ISSUE				

THIS IS A PROPRIETY DESIGN OF AERIAL FACILITIES LTD. REPRODUCTION OR USE OF THIS DESIGN BY OTHERS IS PERMISSIBLE ONLY IF EXPRESSLY AUTHORISED IN WRITING BY AERIAL FACILITIES LTD

TOLERANCES
NO DECIMAL PLACE : ± 0.047"
ONE DECIMAL PLACE : ± 0.010"
TWO DECIMAL PLACES : ± 0.005"

ALL DIMENSIONS ARE IN INCHES UNLESS OTHERWISE STATED

SCALE

Aerial Facilities Ltd
England
Chesham (01494)778301
Fax (01494)778910

TITLE
SIMPLEX CELL ENHANCER, IF RX AND AUDIO MODULE, SCHEMATIC

CUSTOMER

DRG.No 17-002870

Iss. 1A

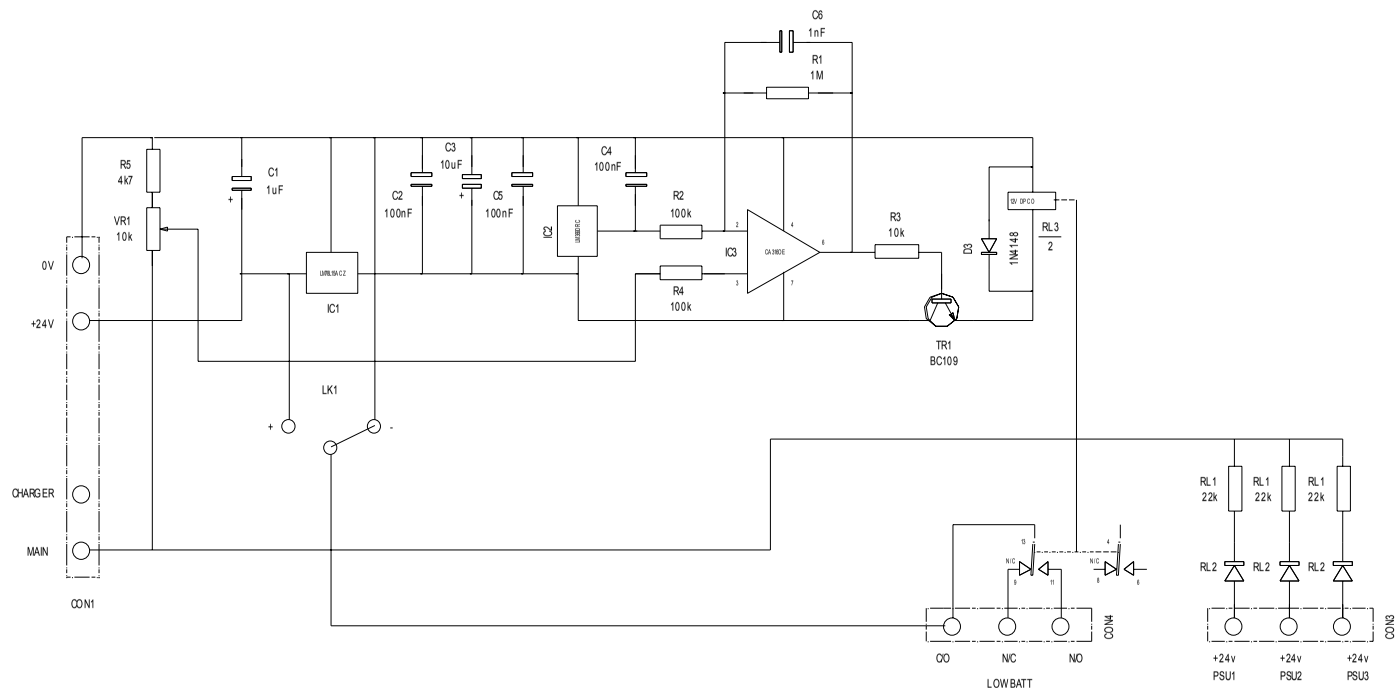

REFER TO PCB ASSEMBLY 13-002104 FOR FURTHER INFORMATION

No	DESCRIPTION	DATE	BY
1A	PRODUCTION ISSUE	24/04/01	MNR

ISSUE

THIRD ANGLE PROJECTION

DRAWN	DATE
MNR	24/04/01
CHKD GD	APPD BB

ALL DIMENSIONS ARE IN mm UNLESS OTHERWISE STATED

THIS IS A PROPRIETARY DESIGN OF AERIAL FACILITIES LTD. REPRODUCTION OR USE OF THIS DESIGN BY OTHERS IS PERMISSIBLE ONLY IF EXPRESSLY AUTHORISED IN WRITING BY AERIAL FACILITIES LTD.

TOLERANCES
NO DECIMAL PLACE ± 1mm
ONE DECIMAL PLACE ± 0.3mm
TWO DECIMAL PLACES ± 0.1mm

SCALE
N.T.S

Aerial Facilities Limited
England
Tel : 01494 777000
Fax : 01494 777002

TITLE
PSU ALARM BOARD (3 INPUT 24V)
CIRCUIT DIAGRAM

CUSTOMER
DRAWING.No
13-002173
A3