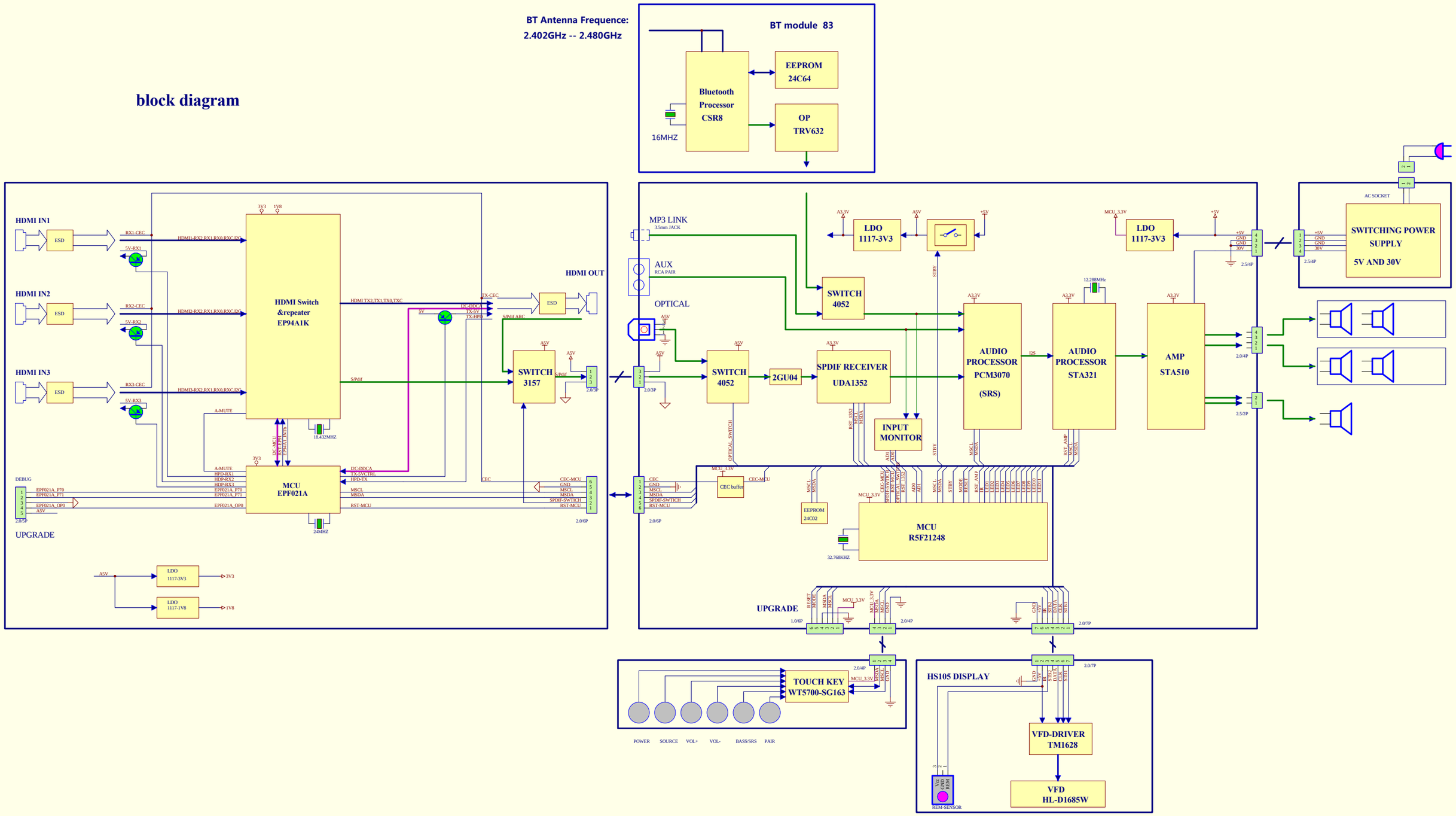block diagram