1- Hardware description
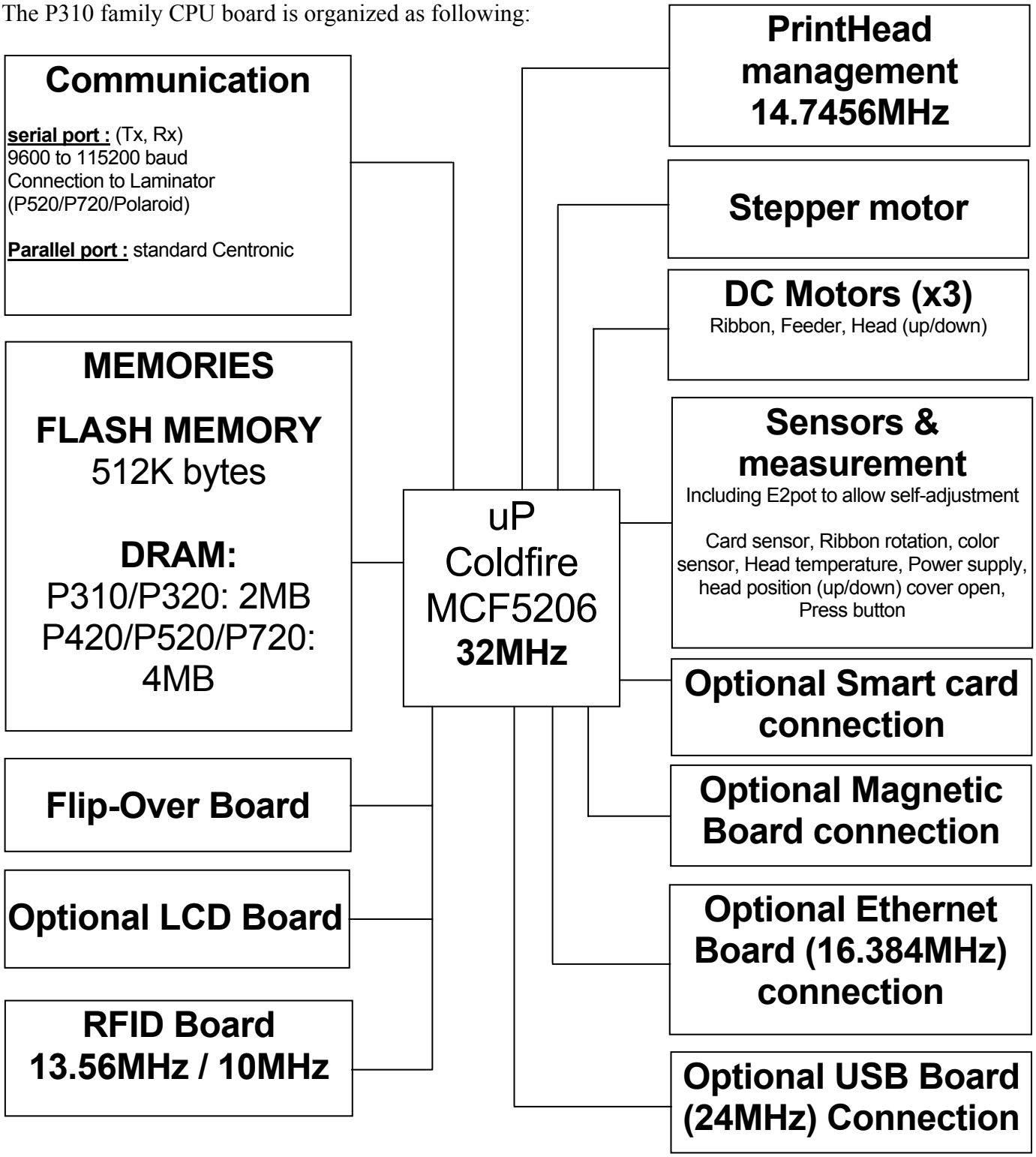
The P310 family CPU board is organized as following: