Circuit Description

Transmitter curcuit

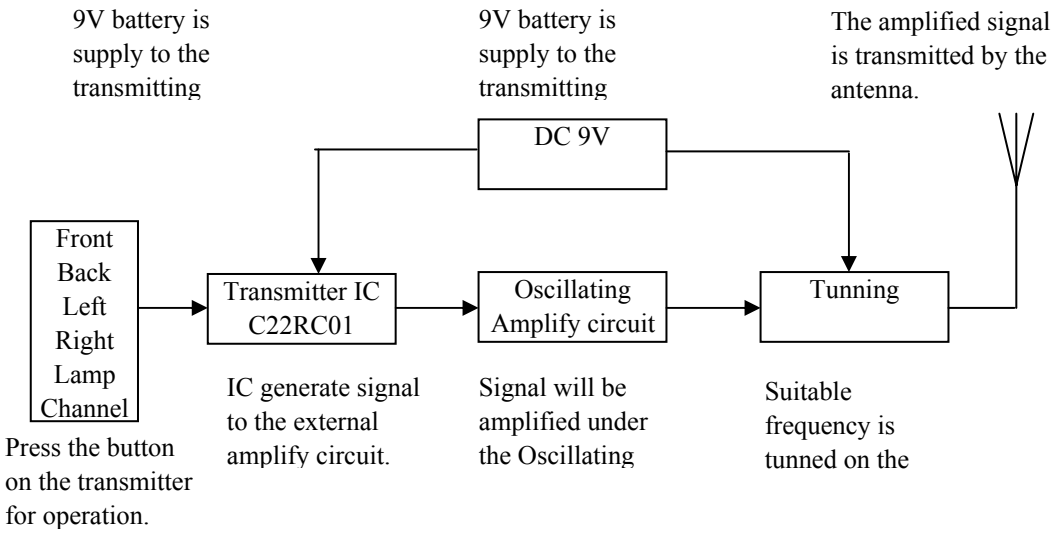
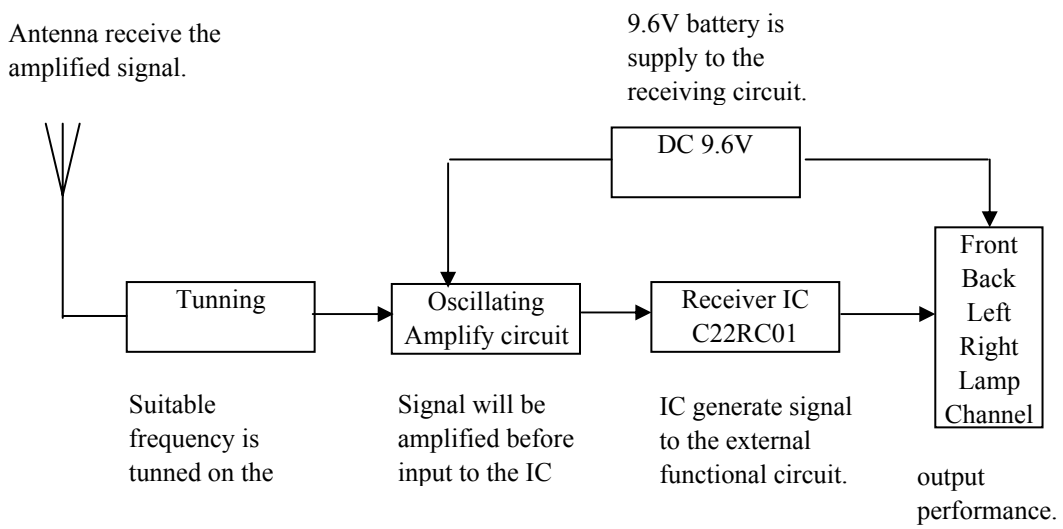
Receiver circuit