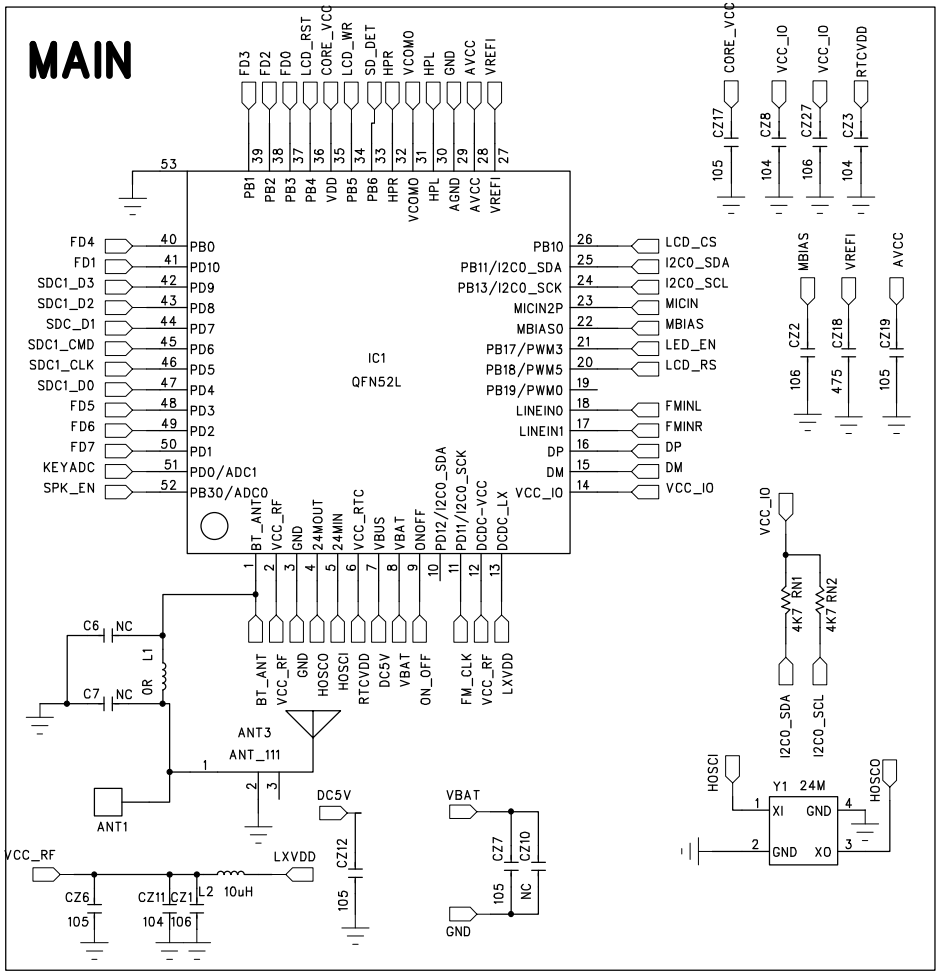
MAIN
IC1
QFN52L
PB0
PD10
PD9
PD8
PD7
PD6
PD5
PD4
PD3
PD2
PD1
PD0/ADC1
PB30/ADC0
PB10
PB11/I2C0_SDA
PB13/I2C0_SCK
MICIN2P
MBIAS0
PB17/PWM3
PB18/PWM5
PB19/PWM0
LINEIN0
LINEIN1
DP
DM
VCC_IO
FD4
FD1
SDC1_D3
SDC1_D2
SDC_D1
SDC1_CMD
SDC1_CLK
SDC1_D0
FD5
FD6
FD7
KEYADC
SPK_EN
LCD_CS
I2C0_SDA
I2C0_SCL
MICIN
MBIAS
LED_EN
LCD_RS
FMINL
FMINR
DP
DM
VCC_IO
ANT3
ANT_111
ANT1
Y1 24M
HOSCI
HOSCO
DC5V
VBAT
GND
VCC_RF
LXVDD
L2 10uH

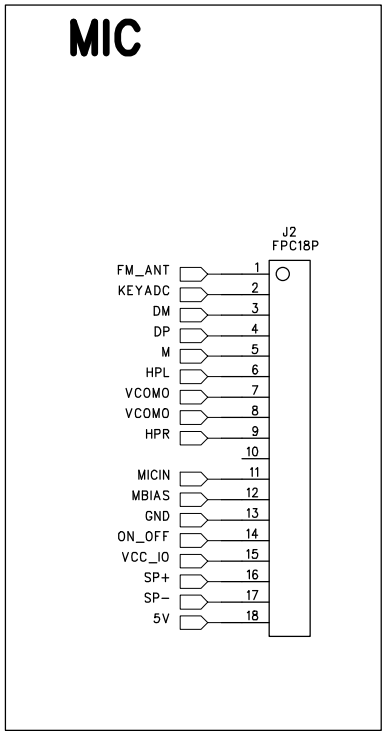
MIC
J2
FPC18P
FM_ANT
KEYADC
DM
DP
M
HPL
VCOMO
VCOMO
HPR
MICIN
MBIAS
GND
ON_OFF
VCC_IO
SP+
SP-
5V

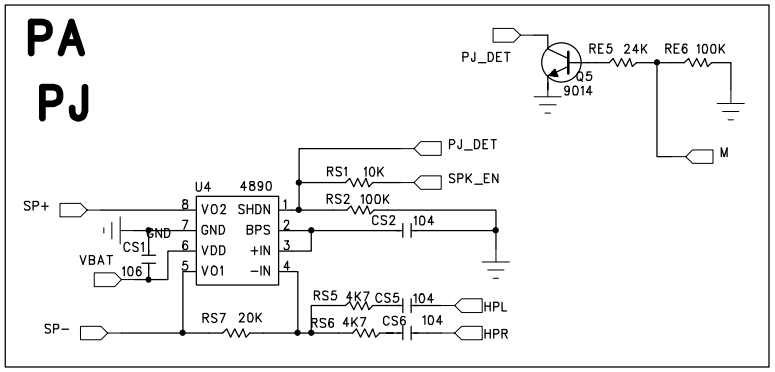
PA
PJ
PJ_DET
Q5
9014
RE5 24K
RE6 100K
M
U4 4890
VO2 SHDN
GND BPS
VDD +IN
VO1 -IN
SP+
SP-
VBAT
RS1 10K
SPK_EN
RS2 100K
CS2 104
RS5 4K7 CS5 104
HPL
RS6 4K7 CS6 104
HPR
RS7 20K

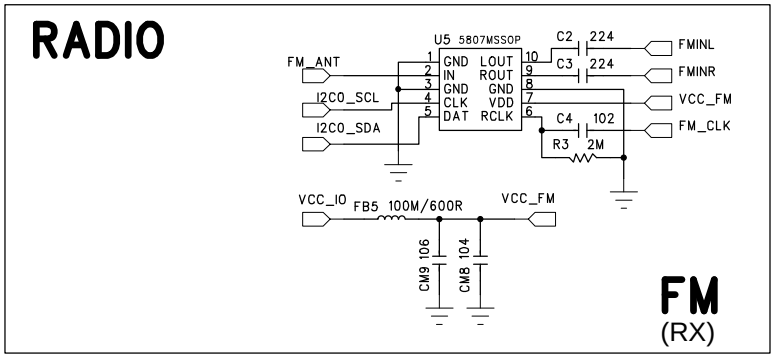
RADIO
U5 5807MSSOP
FM_ANT
I2C0_SCL
I2C0_SDA
GND LOUT
IN ROUT
GND GND
CLK VDD
DAT RCLK
C2 224
C3 224
FMINL
FMINR
VCC_FM
FM_CLK
C4 102
R3 2M
VCC_IO
FB5 100M/600R
VCC_FM
CM9 106
CM8 104
FM
(RX)

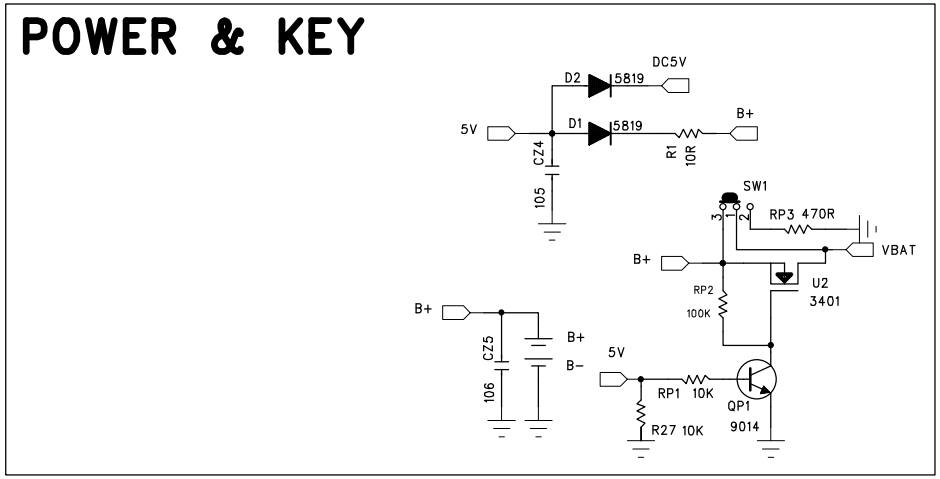
POWER & KEY
DC5V
D2 5819
5V
D1 5819
B+
R1 10R
CZ4 105
SW1
RP3 470R
VBAT
B+
RP2 100K
U2 3401
B+
CZ5 106
B+
B-
5V
RP1 10K
QP1 9014
R27 10K

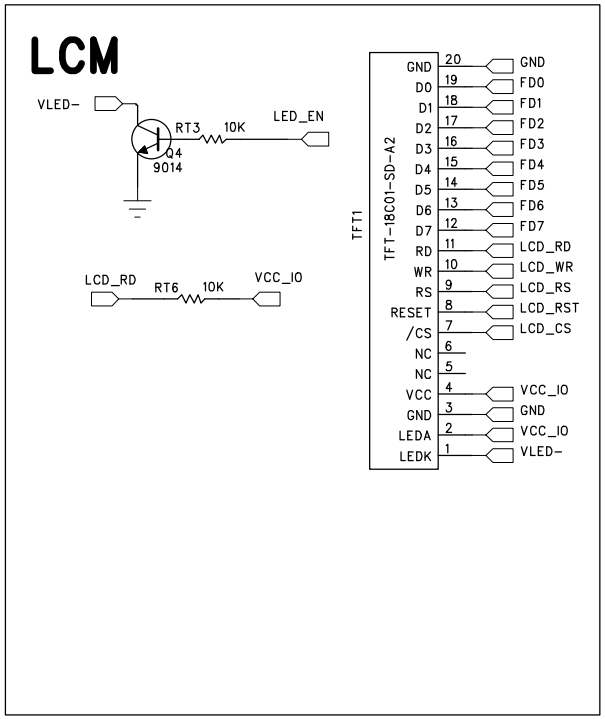
LCM
VLED-
RT3 10K
LED_EN
Q4
9014
LCD_RD
RT6 10K
VCC_IO
TFT1
TFT-18C01-SD-A2
GND
D0
D1
D2
D3
D4
D5
D6
D7
RD
WR
RS
RESET
/CS
NC
NC
VCC
GND
LEDA
LEDK
FD0
FD1
FD2
FD3
FD4
FD5
FD6
FD7
LCD_RD
LCD_WR
LCD_RS
LCD_RST
LCD_CS
VCC_IO
GND
VCC_IO
VLED-

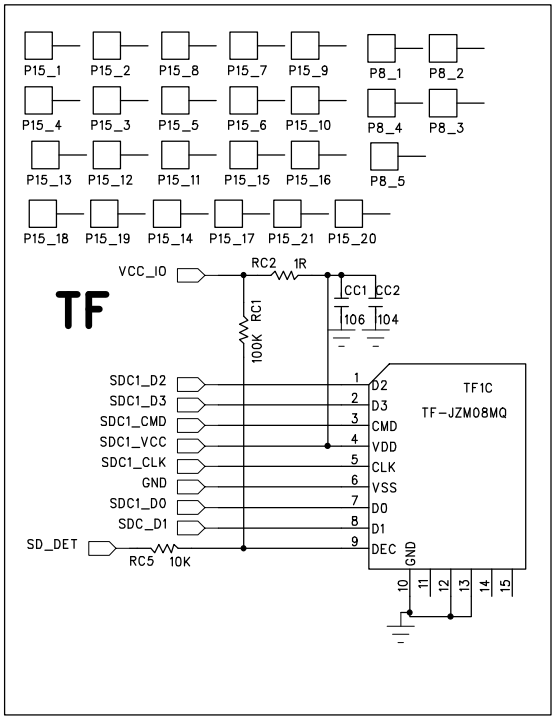
P15_1
P15_2
P15_8
P15_7
P15_9
P8_1
P8_2
P15_4
P15_3
P15_5
P15_6
P15_10
P8_4
P8_3
P15_13
P15_12
P15_11
P15_15
P15_16
P8_5
P15_18
P15_19
P15_14
P15_17
P15_21
P15_20
TF
VCC_IO
RC2 1R
CC1 CC2
106 104
RC1 100K
SDC1_D2
SDC1_D3
SDC1_CMD
SDC1_VCC
SDC1_CLK
GND
SDC1_D0
SDC_D1
SD_DET
RC5 10K
TF1C
TF-JZM08MQ
D2
D3
CMD
VDD
CLK
VSS
D0
D1
DEC
GND