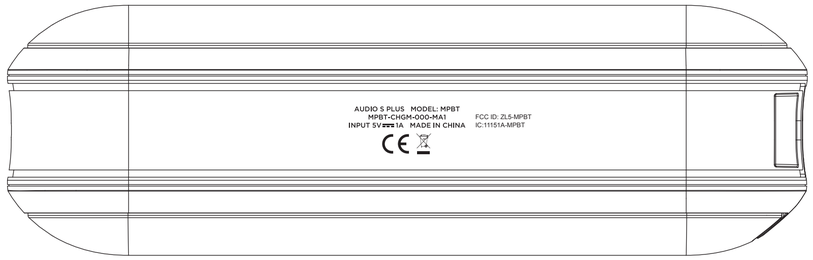


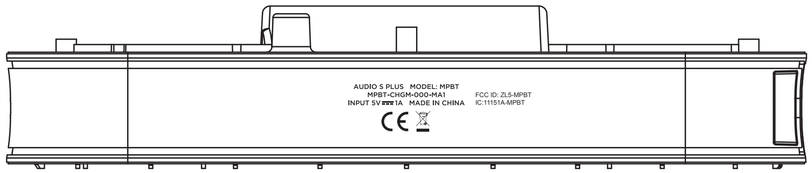


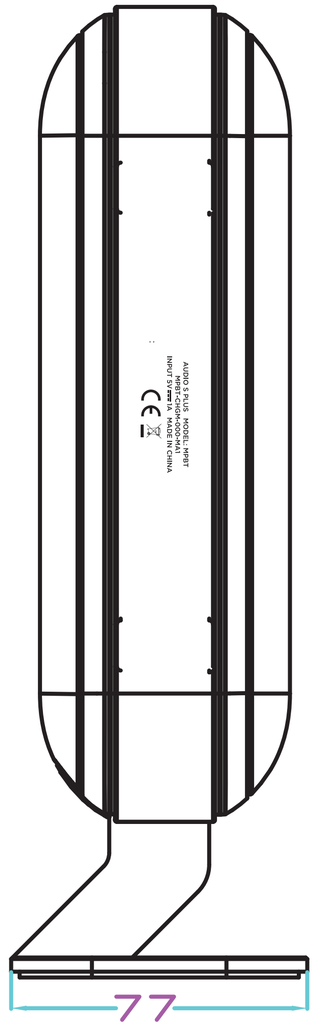


Printed Graphics = Pantone Cool Gray 9C

| | | | |
|---|---|---|---|
| UNLESS OTHERWISE SPECIFIED<br>UNIT : mm<br>TOLERANCE L<100 ±0.5<br>100<L<400 ±1<br>400<L<1000 ±1.5<br>1000<L ±2 | ANGLE :<br>3 RD | | |
| MODEL<br>SKU2 | SCALE | SIZE<br>A4 | |
| MATERIAL (COLOR) | TREATMENT / FINISH (COLOR) | A1 | |
| DESCRIPTION<br>Middle housing SKU2 Cool Gray 11C Matte+Silkscreen ROHS REACH | | A0 | 2015-06-24 |
| PART NO.<br>P02-00238-01 | | ITEM / DATE / RELEASE DESCRIPTION / SIGN. | |
| Plastoform Electronic (Shenzhen) Company Limited | SHEET 1/1 / VER A0 | DRAWN BY / CHECKED BY / APPROVED BY | |

Part should be fulfill the banned and restricted substances requirement which specifie l in ESPP- 3001