REV	DETAIL of CHANGES	DATE
	PRELIMINARY	

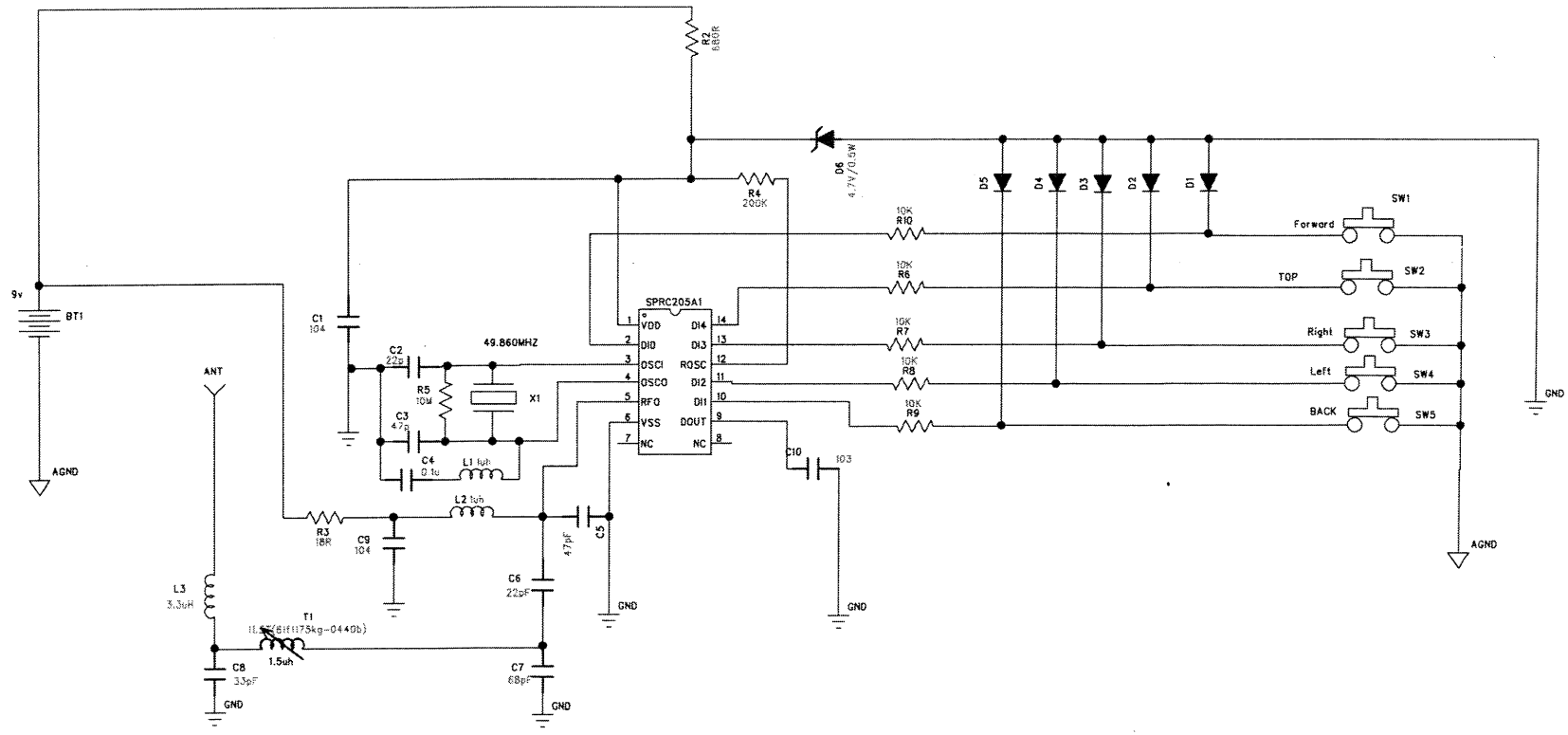

MODEL:	Mini Regenerator TX- 49M	KIN YAT INDUSTRIAL CO.,LTD	
MODEL NO:	14105		
PCB NO:	80TX154R0-94HB-2	DESCRIPTION: Regenerator TX-49M	
PCBA NO:			
DICE NO:		PAGE: 1 of 1	REV: R0
DRAWN BY:	Hong	ISSUED DATE: 12-May-2004	