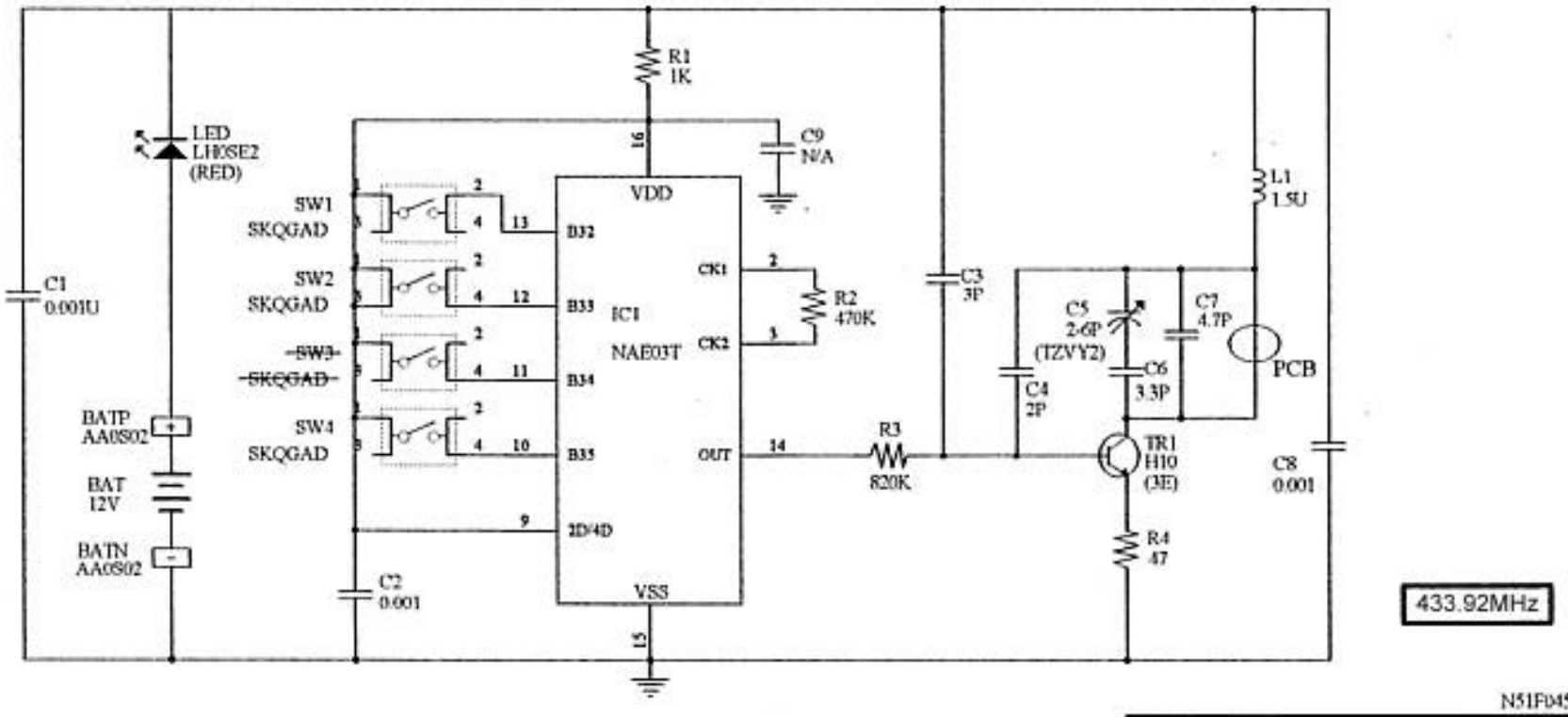


N51F045A

| NUTEK CORPORATION | | | |
|---|---|---|---|
| NAME: ATDA ( 136B3659 ) | | | |
| APPD BY: | | DATE: | |
| CHK BY: | | DATE: | |
| DRN BY: | SHU FANG | DATE: | 2004 03 05 |
| SHEET 1 OF 1 | | REV: | 3 |